www.newsteelconstruction.com

NSC

New roof at Manchester Victoria

October 2014
Vol 22 No 6

Mayfair shops for steel

Centre exhibits long spans

First female President for BCSA

Tata Steel proves responsible sourcing

ADVANCED WELD MODELLING

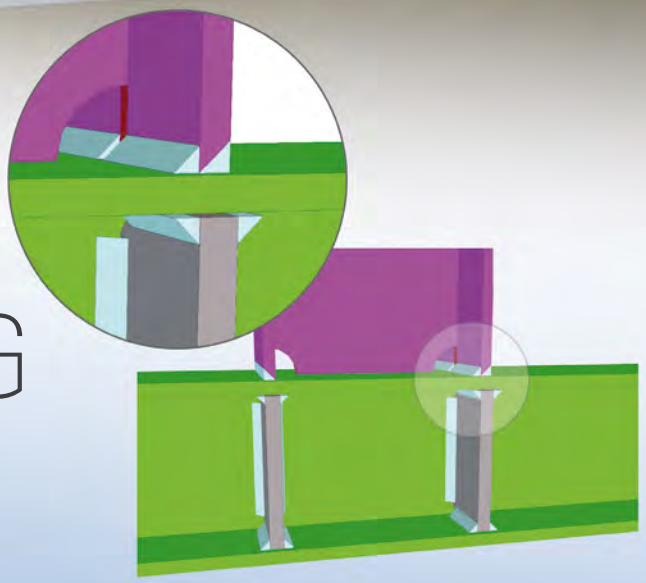

ARTIC by Consteel Technical Services Limited.

With the newly mandated CE Marking for Fabricated Structural Steel, the modelling and tracking of welds is becoming ever more important. Tekla Structures 20 has the ability to model complex welds with new tools that automatically add the weld preparation. Accurate 3D solid representation aids in the checking process whilst providing the ability to quantify. Welds can be uniquely marked and traced, and store more information. This functionality is available everywhere, from modelled welds to system connections and custom components.

Execution class can be defined at project and individual piece level, and the level of traceability defined to suit.

For more information on purchasing Tekla Structures 20 with the new CE Marking role or to discuss all other new features available, please phone 0113 307 1200.

> www.tekla.com/uk/tekla-structures-20-steel-detailing-and-fabrication

TEKLA®
A TRIMBLE COMPANY

Cover Image
49-51 Conduit Street, London
Main client: Aerum and Terrance Hill Group
Structural engineer: Capita
Steelwork contractor: BHC
Steel tonnage: 300t

October 2014 Vol 22 No 6

These and other steelwork articles can be downloaded from the New Steel Construction Website at *www.newsteelconstruction.com*

Responsible sourcing embodied in steel

Nick Barrett - Editor

Better news has been coming recently from industry forecasters about the prospects for workloads increasing in the vital commercial and infrastructure sectors, following the lead given by housebuilding. This will hopefully propel the rest of the construction industry clear of the dark days of recession.

There were predictions when workloads started falling over five years ago that an early casualty of recession would be the focus on sustainability, as cost became the dominating factor. Those predictions have been clearly unfounded as far as the steel sector is concerned. Steel has the strongest sustainability case of any construction material and work has proceeded throughout harder times on research to produce guidance that allows designers to fully take advantage of steel's superior sustainability potential.

All of NSC's readers will be familiar with the distinction between operational carbon emissions of buildings and the embodied carbon that the materials used in their construction contain. Most attention focuses on operational carbon as this is the largest single category of carbon emissions and reducing them has been a main part of the government's drive to reduce emissions.

Calculating the embodied carbon content of a building, or other structure may have been shrouded in confusion for some. For designers in steel however the mystery is over with publication of the latest steel construction design guidance from the BCSA and Tata Steel which is now available for free download (See News). The guide – Steel Construction: Embodied Carbon – gives designers an overview of what to consider when looking at embodied carbon, particularly how to calculate it.

There are pitfalls aplenty for those trying to calculate embodied carbon content and the guide aims to steer designers safely past these. Practical guidance using case studies show how the calculations have been properly carried out on a range of real buildings.

What clearly emerged from the research that underpins the guide is that steel has an embodied carbon advantage over other framing materials when calculations use the latest independently produced data.

Also in this issue we have an article on Tata Steel's great success in becoming one of the biggest and most complex companies to achieve a BES 6001 responsible sourcing accreditation, providing independent third party verification that a wide range of activities with sustainability related implications are being carried out to the highest sustainability and ethical standards. This was a huge cross-company effort that involved taking a hard look at existing activities to make sure that responsible sourcing claims could stand up in the face of probing external inquiry.

Tata Steel already had in place a wide range of responsible sourcing ways of operating, including having regard to human rights issues in the third world where much of the raw materials used in steel production originate. The company came through with flying colours, as you can read in our feature article in this issue.

NSC

EDITOR
Nick Barrett Tel: 01323 422483
nick@newsteelconstruction.com
DEPUTY EDITOR
Martin Cooper Tel: 01892 538191
martin@newsteelconstruction.com
CONTRIBUTING EDITOR
Ty Byrd Tel: 01892 553143
ty@barrett-byrd.com
PRODUCTION EDITOR
Andrew Pilcher Tel: 01892 553147
admin@newsteelconstruction.com
PRODUCTION ASSISTANT
Alastair Lloyd Tel: 01892 553145
alastair@barrett-byrd.com
NEWS REPORTER
Mike Walter
COMMERCIAL MANAGER
Fawad Minhas Tel: 01892 553149
fawad@newsteelconstruction.com

PUBLISHED BY BCSA AND TATA STEEL, IN ASSOCIATION WITH SCI

The British Constructional Steelwork Association Ltd
4 Whitehall Court, Westminster, London SW1A 2ES
Telephone 020 7839 8566 Fax 020 7976 1634
Website *www.steelconstruction.org*
Email *postroom@steelconstruction.org*

Tata Steel
PO Box 1, Brigg Road, Scunthorpe,
North Lincolnshire DN16 1BP
Telephone 01724 405060
Website *www.tatasteelconstruction.com*
Email *construction@tatasteel.com*

The Steel Construction Institute
Silwood Park, Ascot, Berkshire SL5 7QN
Telephone 01344 636525 Fax 01344 636570
Website *www.steel-sci.com*
Email *reception@steel-sci.com*

CONTRACT PUBLISHER & ADVERTISING SALES
Barrett, Byrd Associates
7 Linden Close,
Tunbridge Wells, Kent TN4 8HH
Telephone 01892 524455
Website *www.barrett-byrd.com*

Steel sector publishes guide on embodied carbon

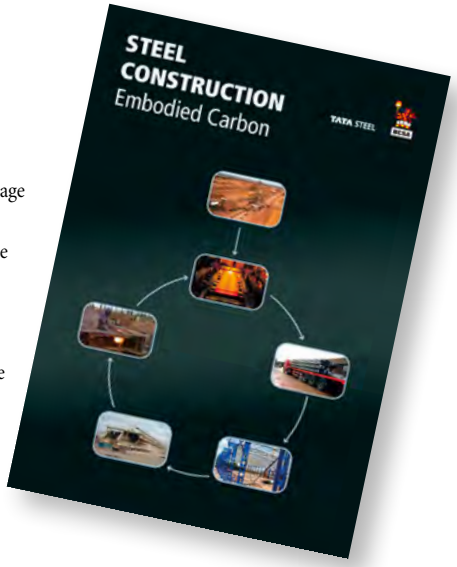

Tata Steel and the British Constructional Steelwork Association have published a guide on embodied carbon, the latest in their series of steel construction guidance publications.

A must-read for the entire steel construction industry, the guide explains what embodied carbon is and how it impacts on the total emissions of a building throughout its lifecycle.

The Government has set ambitious and legally binding targets to reduce national greenhouse gas emissions and, as the operation of buildings currently accounts for nearly half of these, significant improvement in new and existing building performance is required.

Although operational carbon emissions from buildings are the primary sustainable construction driver in the UK at present, improvements in energy efficiency mean the importance of embodied carbon is increasing.

The guide gives designers an overview of how embodied carbon should be considered and calculated, some practical guidance on how to assess it on individual projects, and the significance of end of life impacts, while some case studies show how structural steelwork compares with other framing materials.

'When calculated the correct way, steel has an embodied carbon advantage over other framing materials. This guide explains clearly how to calculate the embodied carbon of a building using the latest independent data. I would strongly recommend that all construction professionals familiarise themselves with the methods and data outlined in the brochure,' said Sarah McCann-Bartlett, BCSA Director General.

The guide is available for download here.

St James's Market project kicks off

Two eight-storey steel framed commercial buildings are under way as part of a major investment programme for the St James's area of central London.

The scheme will deliver 24,100m² of commercial and retail space across the two blocks that are situated between Regent Street and Haymarket.

14-22 Regent Street (pictured) will feature a retained façade, allowing the new structure to fit seamlessly into its historic streetscape. Behind the façade a new steel framed structure will be erected accommodating retail at basement and ground floor levels, with offices above.

The 52-56 Haymarket block has a slightly smaller footprint and will be highlighted by an aesthetic curved cladding incorporating glass, Portland Stone and horizontal metal detailing in response to the surroundings.

Working on behalf of main contractor Balfour Beatty, William Hare will erect 3,500t of structural steelwork for the project. The erection programme began last month (September) and is scheduled to be completed by May 2015.

"On both buildings all of the services have been integrated within the floor beams," says Adam Suthers, William Hare Project Engineer. "This was quite a challenge as the floor beams have to span quite long distances for the required column free areas, while at the same time not be too deep so as to interfere with the needed shallow floor construction."

William Hare and structural engineer Waterman have designed the steel frames to incorporate a series of 510mm deep fabricated cellular beams with 350mm deep holes to accept the services.

These sections are stiff enough to span the required grids, which are up to 18m long in places.

Steel completed on Dublin distribution centre

Pallas Foods will create nearly 100 new jobs as part of a multi-million euro investment at its new distribution centre in North County Dublin.

The project involves the construction of two warehouses totalling 33,000m², associated offices, 330 car parking spaces along with 183 truck parking bays on a 40 acre site.

Kiernan Structural Steel has completed the erection programme that included 2,500t of steelwork and 17,000m² of metal decking.

Founded in the 1980s, Pallas is one of the Republic of Ireland's biggest food distributors, employing close to 600 people.

Eurocode compliant ComFlor 9 now available

The new Tata Steel composite floor design software ComFlor 9, developed for Tata Steel by the Steel Construction Institute, is now Eurocode compliant and available to design engineers.

ComFlor 9 software analyses the Tata Steel floor deck range from shallow decks, ComFlor 51+, ComFlor 60 and ComFlor 80 to deep deck, ComFlor 225 in composite floor construction and is the first major update to this widely used (Comdek) software since 2009.

The key features of the new software are:

- Design to the Eurocodes, including localisation for UK, Ireland and the Netherlands.
- Customised deck profile selections for multiple design locations worldwide, namely New Zealand and ROW (Rest of the World), where selection of a region will present the profiles currently available there.

The new Eurocode design option is in accordance with EN1991, EN1993, and EN1994 as implemented by local National Annexes.

When using ComFlor 9, the first choice should be design code and location. Defaults are Eurocode and United Kingdom which will provide Eurocode design to the UK National Annexes and the profile range available in the UK.

For further support or more details on the use of ComFlor 9, please contact Mark Davies at mark.r.davies@tatasteel.com, call 01244 892131 or download the software here.

Campus to usher in new era for Belfast

Steel erection has begun on the University of Ulster's £250M Belfast City Campus.

Professor Richard Barnett, the University's Vice Chancellor said: "The Campus will usher in a thrilling new chapter in the development of the University, the city and the province."

Designed by architect Fielden Clegg Bradley, the Campus building will boast a number of public spaces, such as eateries and a library, alongside its educational facilities.

Walter Watson will erect approximately 670t of steel for the project which is scheduled to be completed during the summer of 2015.

London Bridge stays on track with steel

Working on the tight and confined London Bridge station redevelopment site, Cleveland Bridge has no room to install a mobile crane and has had to come up with a novel way of transporting and erecting girders.

"We've had to use a self propelled mobile transporter (SPMT) carrying two scissor lifts which in turn support a girder. Once the SPMT has been manoeuvred across the site and is in position, the scissor lifts are extended to lift the girder into place," said Ben Binden, Cleveland Bridge Project Manager.

Three pairs of plate girders, up to 30m long and weighing 55t, form a new bridge deck for the station project.

In total Cleveland Bridge will erect 29 bridge decks during a number of sequential visits, adding up to about 4,000t of steel, with the last ones erected in early 2017.

"Each of the visits requires us to erect either three or four decks depending on their position, and having completed the work for platforms 14/15 and 12/13 we've installed seven decks so far."

All 15 platforms at London Bridge are being rebuilt to be covered by strikingly designed undulating canopies of steel and aluminium, incorporating north-facing glazing that will let light flood the platforms and the new and larger concourse being built directly below at street level.

To keep passenger disruption to a minimum, the works are being undertaken in a sequential manner, with platforms being upgraded two at a time, thereby leaving the station with 13 'live' platforms throughout the construction programme.

Work is now progressing towards the completion of platforms 11 and 10, which should be ready for opening between 20 December and 4 January 2015.

NEWS IN BRIEF

This year's annual **SCI** event will be held on 5 November at the London Transport Museum and is entitled 'A step change in sustainability'. Topics to be discussed include: what drives cost and material use; what we can do better, and whether a change in sustainability is necessary and achievable. To reserve a place contact Jane Burrell, Tel +44 (0) 1344 636 500 or email education@steel-sci.com. Free entry to the London Transport Museum is included.

AceCad Software has launched a new and free version of BIMReview which is said to enable effective review and visual communication through BIM models. Known as BIMReview lite, AceCad said it can improve workflow by importing BIM models and associated data from multiple CAD authoring tools, check for clashes and collaborate with others in the construction supply chain.

Lindapter has developed a new steelwork clamp for connecting steel sections known as the Type AAF. It is said to offer adjustability, anti-corrosion protection and high load capacities, even in low temperature environments. The clamp features an innovative two-part design that self-adjusts to suit a range of flange thicknesses, allowing contractors to use a single product type for multiple connection requirements.

Software developer **CSC** has released updates to Solve, its general purpose FE analysis software. CSC says its in-house development team has improved performance and developed a range of new features to further enhance the analysis capabilities within Solve, thereby improving productivity for the structural engineer. The combination of a new analysis engine, brand new view management tools and improved sub-structure creation allows users to work even faster and more efficiently than ever before. In addition engineers can benefit from greater BIM integration with links to Tekla Structures, Autodesk Revit, Fastrak and Orion.

AROUND THE PRESS

Construction News
8 August 2014
ISG drops Liverpool dockside anchor
[Liverpool Exhibition Centre] - Liverpool City Council was also sensible enough to clear a large enabling works contract that included the advance purchase of the structural steel. "That allowed us and the steelwork contractor to really hit the ground running. The steel was coming out of the ground within a couple of months of the contract being signed," says ISG project director Frank Joyce.

Construction News
5 September 2014
Steel firms poised to up output as recovery kicks in
Severfield chief executive Ian Lawson says the market looks healthier as more contracts come forward and consultants and clients increase their engagement with the sector. He adds that consultants in the steel market are taking on a huge amount of resource at present, indicating that they are in the early stages of working on contracts.

Building Magazine
29 August 2014
What did Scotland ever do for architecture?
[Sir William Fairburn] – Fairburn was a bridge and ship designer and discovered that by treating both as essentially metal tubes, it was possible to create a lightweight structure that retained incredible strength and stiffness. His innovations heavily informed the development of cold-formed steel where steel sheets are rolled or pressed to form construction components such as beams, columns or joists.

Building Magazine
12 September 2014
Thin end of the wedge
[Leadenhall Building] – Behind the glass veil in which the tower is encased, the building's structural expressionism comes to bear, but with unprecedented subtlety and restraint. The tower's vertical sweep is faintly interrupted by six transom levels and the diagrid cross bracing that wraps around the tower's frame like a steel exoskeleton.

SCI launches new recorded technical webinars

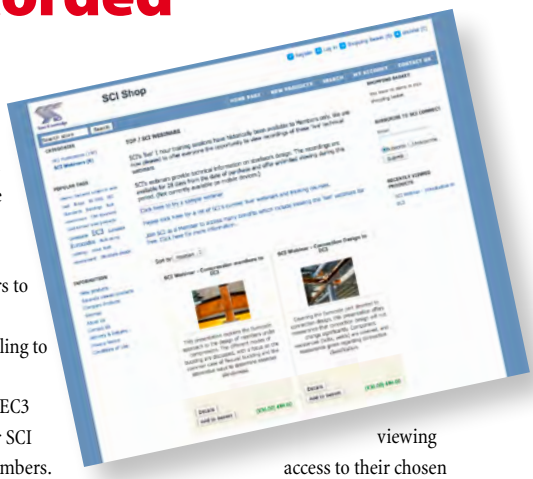

The Steel Construction Institute has made available for purchase the full original live recordings of its technical webinars.

Once purchased the recorded webinars can be viewed as many times as desired within a 28 day period, giving individuals and companies greater flexibility.

SCI's webinars, which provide technical information on steelwork design, have traditionally run as live hour-long training sessions.

The recorded webinars available for streaming are:

1. Introduction to EC3
2. Eurocode loading and selection of sub-grade
3. Frame stability to BS 5950 and EC3
4. Compression members to EC3
5. Lateral torsional buckling to EC3
6. Connection design to EC3

Each webinar costs £30 for SCI members and £70 for non-members. For this viewers receive 28 days full viewing access to their chosen webinar(s) from the SCI shop.

Third Don Crossing gets under way

Work has commenced on the £14.3M Third Don Crossing in Aberdeen.

Designed to relieve congestion on the two existing river crossings, the 90m span bridge will be constructed using twin open box steel girders supporting a reinforced concrete deck.

Balfour Beatty, appointed by Aberdeen City Council, is responsible for the construction of the crossing over the River Don, a smaller bridge across a stream and 2.5km of road, including a stretch of new carriageway linking to the road network north of the river, and the realignment and upgrade of roads to the south.

Finance, Policy and Resources convener Councillor Willie Young said: "The Third Don Crossing is a key project identified in Aberdeen's Strategic Infrastructure Plan. We are pleased to be working with Balfour Beatty to deliver this significant piece of infrastructure for the city."

The new bridge is expected to be open to the public by late 2015.

Mumbles lifeboat station restored

Newport Galvanizers, part of Wedge Group Galvanizing, has galvanized 240t of steel as part of the refurbishment and restoration of the 115 year old Mumbles RNLI lifeboat station in Swansea.

The project saw the company provide its hot-dip galvanizing treatment to the station's tipping cradle, static span and slipway, before the renovated station officially reopened.

Due to the station being Grade II Listed, the restoration was commissioned to make use of the existing pier, and also provide a more suitable launch for the RNLI's bigger Tamar class boat.

Mike Small, Sales Manager at Newport Galvanizers, said: "We were delighted to support the refurbishment of the Mumbles Lifeboat station, an iconic structure in Swansea Bay.

"We've worked on a number of lifeboat station refurbishments over the past 10 years in Moelfre, Angle and Tenby."

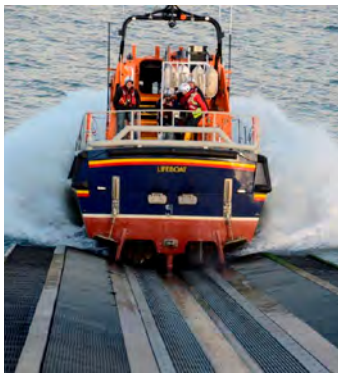

Cantilever offices for central Glasgow

A number of high profile schemes are currently under way in Scotland's largest city including St Vincent Plaza, an efficient building that will provide 15,700m² of Grade A office space spread over 12 floors.

Located in the city's business district, St Vincent Plaza will feature a prestigious double height reception area and all of the floors will benefit from large flexible column free spaces, due to the structural steel frame only having four internal columns.

The steel frame has been designed around a number of challenging parameters, most notably how and where to put the bracing and how best to incorporate two feature cantilevers.

"The steel frame gets all of its stability from bracing, either located inside a core or around some of the structural bays," explains Eddie Gray, Struer Director.

The two most visual standout features of the building are the cantilevers, positioned on the south and north elevations. Both are one bay wide, with the southern element cantilevering by 4.5m and the northern by 6m.

Working on behalf of main contractor Bowmer & Kirkland, BHC has erected 1,800t of steelwork for the project which will be completed in June 2015.

Contractor unveils £5M processing plant

Caunton Engineering has officially unveiled the Cut Shack, a new £5M steel fabrication plant at its Moorgreen facility.

The purpose built plant is said to combine leading edge technology with state-of-the-art machinery and will help create 20 engineering jobs.

Simon Bingham (pictured), Caunton Engineering Managing Director said: "The Cut Shack is the result of more than four years' planning and development and reflects a desire to innovate and change the way we do things.

"It has a unique configuration of nine separate processing machines sourced from Germany and the USA, which alone have a combined cost of more than £2.5M. This will allow us to effectively revolutionise our production process, resulting in huge efficiencies and increased flexibility. We have now created a purpose-built plant which reflects the very latest in industry thinking gained from a range of similar operations across the world."

The opening of the Cut Shack is set to boost the number of apprenticeships offered by Caunton, with five extra fabrication and welding positions being created.

Hempel launches new primers

Coatings supplier Hempel has launched Hempadur AvantGuard, a range of three new anti-corrosive zinc primers.

Zinc coatings are commonly used to protect industrial structures and equipment in C4 and C5 corrosive conditions, where saltwater and high humidity corrode unprotected steel.

Based on new, patented AvantGuard technology, the Hempadur zinc primers have been developed for a range of industries and applications, from offshore oil & gas platforms to wind turbines.

Pernille Lind Olsen, Hempel Group Protective Product Director said: "AvantGuard is perhaps one of the biggest changes in anti-corrosive technology since zinc coatings were first introduced during the 1960s. The technology gives customers strong anti-corrosion performance in a coating that has high mechanical strength."

Diary

For SCI events contact Jane Burrell, tel: 01344 636500 email: *education@steel-sci.com*

Tuesday 7 October 2014
Essential Steelwork Design
This course introduces the concepts and principles of steel building design to EC3.
(2 day course) London
For details click here

Tuesday 14 October 2014
Composite Design to EC4 (Part 1)
This first webinar will look at basic design principles, types of beams and discuss some common misunderstandings.
1 hour webinar

Wednesday 5 November 2014
Members Day
Speakers from Cambridge University and William Hare will present on whether a step change in sustainability is required

Thursday 6 November 2014
Embodied Carbon
This webinar will provide practical guidance on how to assess embodied carbon on projects.
For details click here

Tuesday 11 November 2014
Steel Frames and Disproportionate Collapse Rules
This one day course provides a solid introduction in the design of steel framed buildings to avoid disproportionate collapse.
(1 day course) Milton Keynes
For details click here

Tuesday 18 November 2014
Composite Design to EC4 (Part 2)
The second part of this two part webinar will look at Design of Composite Slabs, Scope of EN1994 and technical differences between BS5950 and EN1994
1 hour webinar

Thursday 4 December 2014
Portal Frame Design
This course provide in-depth coverage of the major issues surrounding the analysis, design and detailing of portal frames.
Birmingham
For details click here

Wendy Coney, the BCSA's first female President

New President sees better times ahead

Many chief executives can proudly boast that there are no jobs on the shop floor of their factories that they haven't done or can't do. BCSA's first female President Wendy Coney, owner and Managing Director of Shipley Structures, is one of them.

Wendy had a different start to her career than any of her steelwork contractor counterparts, having originally opted for a career as a nurse. Her journey from intensive care nursing to leading one of the UK's most successful medium sized steelwork contractors is probably unique in the UK construction industry.

The company was founded in Grantham by Wendy's father David Maddocks in 1982. It quickly built a sound reputation as a reliable, quality subcontractor to bigger steelwork contractors. David's background was in engineering. "Structural steel was only one of his business interests," Wendy says, "The company also produced moulds and conveyors for power stations, the coal mines and railways.

"With mining going into decline, we had to change." Recession in the early 1990's meant that work dried up so the company started to build its own client base by moving into design, build and erect.

Today Shipley Structures continues to grow, operating from a 50,000 sq ft factory based on a 7.5 acres site in Lincolnshire. It specialises in steelwork projects up to circa £2M and has an impressive design and build pedigree. A Maggies Care Centre for cancer care – the only steel framed one so far – made the Structural Steel Design Awards shortlist in 2012.

Other recent projects include a steel frame for a new wing at Colchester Hospital, a series of schools in Peterborough, college buildings in Nottingham, extensive refurbishment of Oxford University and the new Centre Parcs development in Woburn. A typical project will involve around 700t of structural steelwork, but the value could vary between £1M and £2M depending on the design and complexity of the project.

Wendy joined the company for a few weeks to help out when her father set up the business but ended up staying: "I never left," she said.

"At school I had no definite idea what I wanted to do for a career, but as my mother, aunts and grandmother had been nurses,

it seemed the natural route to take. I was always interested in my father's business and I had no brothers. But being female, it wasn't an obvious career choice and I never thought I would work in the fabrication workshop."

From the beginning, Wendy accepted that she had to learn how to do everything, so she settled down for a few years doing her apprentice training on the shop floor. "I enjoyed all aspects, especially fabricating, reading a drawing and the satisfaction of putting something together. However I think I would now need a little practice to be allowed back on the shop floor welding!"

"I was thrown in at the deep end and learned new skills on every new project; basic things like how to calculate the weight of steel, not at all difficult once you know how and really interesting to realise doing something practical involves simple maths that anyone can do."

Running her first job for a water treatment works, involved every aspect, from estimating to erecting on a job that had curves, galvanized steel painted with three coats, including the cold rolled and sheeted! "It was a steep learning curve," she recalls.

This shop floor experience has made Wendy a passionate advocate of apprenticeships. "I'm living proof that regardless of your gender or background you can do it. We have to educate and encourage our young people of today, schools and parents have to think hard when advising our youngsters, careers in Construction can be very rewarding at all levels"

Having been involved with the business for several years, Wendy did eventually find time to get married and have two children, a boy and a girl now in their teens. Richard Wendy's husband is a farmer, who runs his own business.

"My father had a love of narrow boats and was just finding time to enjoy the many canal networks when he was diagnosed with cancer and sadly lost his battle a year later as did my sister. During this time I was pregnant with my second child, it was an emotional roller coaster but running a business doesn't allow the luxury of maternity leave and without my father to step back in as he did with my first. Baby would often have to come to the office. I had a dedicated hardworking workforce who I felt very loyal too, closing down was never an option."

Today Shipley Structures is looking ahead to better times than the recent past when demand for structural steelwork fell in line with the global economic crisis. "I remember times before the 1990's recession when you didn't even have time to prepare a full quote. When we did subcontract work for bigger steelwork contractors, work was sent across and prices agreed later. Agreeing a fair rate for the job was never in question, there was a great tradition of trust and fairness."

Shipley Structures joined the BCSA in 1991 and Wendy took over full responsibility for running the company following the untimely death of her father.

"We now subcontract some work back to BCSA companies that we used to work for, One of the great and interesting things about BCSA membership, is knowing that we are all rival companies, but you can call on any of them for technical and best practice advice, and it will be freely given. It must be unique in industry that you can call on competitors for advice on how to do things better."

Wendy is acutely aware that a lot of eyes will be on her as the first female president of the BCSA, but she is used to that. "It was a lonely trail," she recalls. "Being on the shop floor didn't mean I was fully one of the lads, and being the owners daughter you never really mix in the same way as the others. I was never asked to go out for a beer after work for example."

"To be the first female President of the BCSA is a great honour, a huge responsibility and also a great opportunity to promote women in construction.

"I am a passionate believer in women being given the same opportunities as men, This is an era when there is a big push for more women to take on STEM roles and the BCSA is rightly behind that.

"I don't like the idea of positive discrimination though; women should be given opportunities but not pushed into roles just to make up the numbers, however they must be shown that there are terrific opportunities in engineering and construction out there."

Another key issue for Wendy's Presidency will be continuing the BCSA's lobbying with other specialist contractors for prompt payment along the supply chain. "We have to educate the market that the supply chain needs to be paid properly and promptly and if this doesn't happen then more and more companies will exit the market. If the supply chain isn't strong then there won't be a construction industry.

"The steel construction sector certainly deserves to thrive. The buildings we produce as an industry are amazing. Gone are the days in the 1970's and 1980's when concrete jungles were springing up, since constructional steel has captured market share over the last 30 years or so we see fabulous buildings of all types throughout the country. Buildings that we can be proud to part of.

There are exciting times ahead, as technology and automation continue to improve, Construction is growing and 'Steel is the material of choice.'"

Some projects Shipley Structures have made major contributions towards

New Maggies Cancer Centre, Nottingham City Hospital

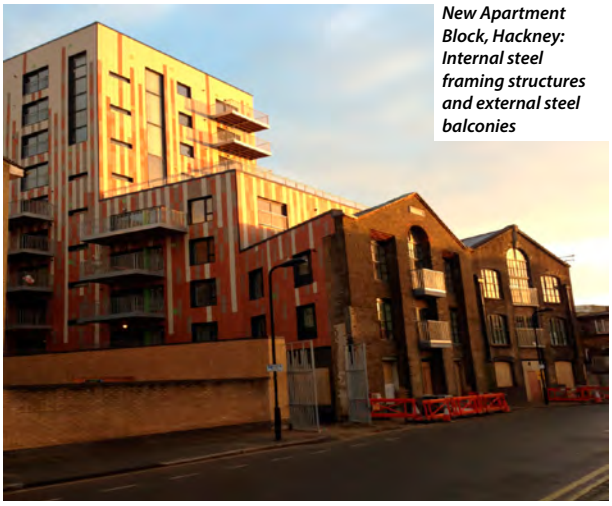

New Apartment Block, Hackney: Internal steel framing structures and external steel balconies

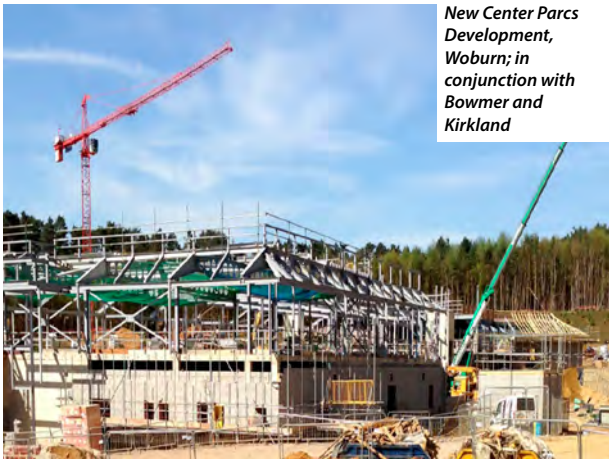

New Center Parcs Development, Woburn; in conjunction with Bowmer and Kirkland

Southside Shopping Centre, Wandsworth

Big trusses create Mersey expo centre

Trusses spanning in two directions form the roof

FACT FILE
Exhibition Centre Liverpool
Main client: Liverpool City Council
Architect: Denton Corker Marshall
Main contractor: ISG
Structural engineer: Booth King
Steelwork contractor: Billington Structures
Steel tonnage: 2,000t

A grillage of long trusses has been installed to create the column free spaces for the three halls of the Exhibition Centre Liverpool. Martin Cooper reports.

Over the last 30 years or so Liverpool's Mersey riverfront has been transformed from redundant docks into a renowned tourist, leisure and business destination.

Restaurants, bars, hotels and museums now occupy land that used to accommodate warehouses and docks for the once busy port.

Situated on the riverfront and one of the major contributors to Liverpool's regeneration is ACC Liverpool, home to the BT Convention Centre and Echo Arena, which opened in 2008 as part of the city's European Capital of Culture Year.

The ACC Liverpool (see NSC October 2006) has become one of the leading venues in the north of England and is said to have generated £760M in economic impact.

To build on this success a new exhibition centre with a combined hotel is being constructed alongside the ACC Liverpool. A 35m-long footbridge will link the two buildings to form what is claimed will be the only purpose-built interconnected arena, convention and exhibition centre in the whole of Europe.

Known as Exhibition Centre Liverpool (ECL), the building is 164m-long by 85m wide and will offer 8,100m² of exhibition space.

It has three large halls, each measuring 60m × 45m, that can be used separately or opened up via sliding partitions into one large space.

The building's frontage, overlooking the River Mersey, features a fully glazed double height public concourse that runs the full length of the structure. Above the main concourse there is a first floor level accommodating meeting rooms and offices.

Commenting on the architectural design of the ECL, Denton Corker Marshall says, the language and materials of the main

Footbridge link

The final piece in the steel erection jigsaw was the installation of the 35m-long footbridge link between the ECL and the ACC Liverpool structures.

The bridge was brought to site as 12 pre-fabricated steel sections, assembled and then lifted in to position.

Alan McCarthy-Wyper, managing director of ISG's construction business, commented: "Whilst the bridge will not be handed over until the development is complete, the positioning of the steelwork marked a major milestone for this project.

"The bridge will form a physical and metaphorical link between Liverpool's past and its future which will become a lasting landmark for the city.

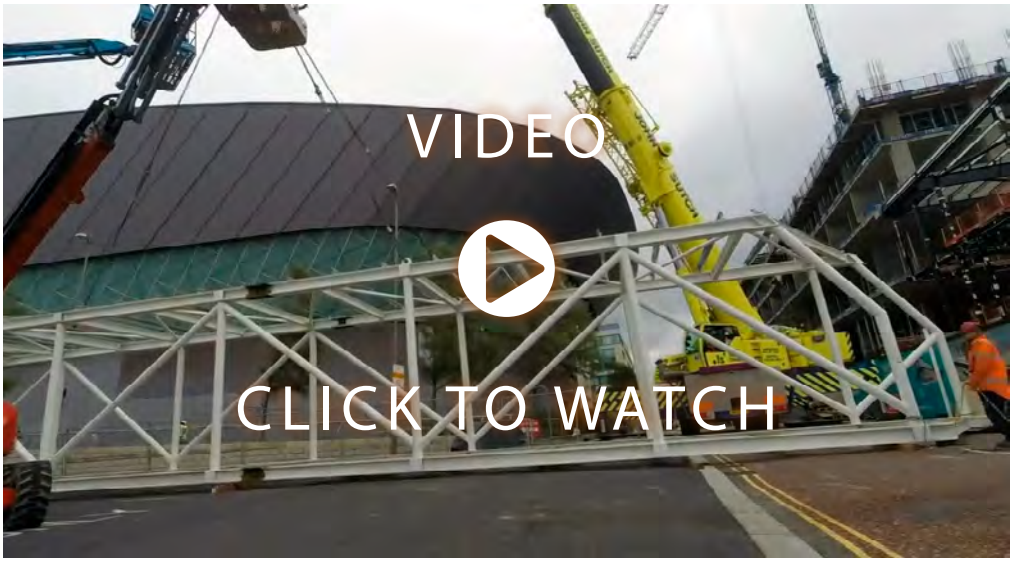

façades draw on the industrial heritage of the Liverpool docks, while the public concourse's glazed ribbon wall provides the public face of the building.

It is however the exhibition halls that are the main feature of the ECL. Creating such a large column free space, albeit one that can be divided into three separate zones, meant a steel-framed solution for the building was the only way to go.

"The design of the ECL, excluding the hotel, was always going to be steel because it is the most economical way to create flexible long span areas," says Frank Joyce, ISG Project Director.

The roof structure consists of a two-way spanning grillage of long span trusses each with a minimum overall depth of 3.5m. The roof has a 1.5 degree pitch and this is built into the grillage with varying truss depths.

The trusses have been designed to absorb some big loads as the roof of the ECL will have rigging and lighting hung from it. Each 5m × 5m grid of the roof steelwork can take maximum single loads of either 5t in hall C or 3t in halls A and B.

"As well as the large loads that have to be accepted by the roof trusses there are also some tight deflections which have to be taken into account due to the sliding partitions between halls A and B, and between B and C," says Ian Leaper, Booth King Project Engineer.

Halls A and B are identical with a height of 10.5m to the underside of the trusses, but hall C has extra headroom and is 16m high. This extra height will allow hall C to accommodate rock and musical stage shows.

The roof grillage is supported on perimeter columns with two additional internal columns at the interface of hall A and B.

The sliding partition between these two halls would have meant this truss being much deeper than its neighbours and consequently disrupting the roof top design. The most economical solution was to install two internal columns to help support the partitions and position them where they will ordinarily be hidden from view within the dividing wall.

Putting the columns between halls A and B should not infer with the ECL's large concert holding abilities as it is envisaged that C and B will accommodate the stage and standing areas, while A would be portioned off and house the back-of-house facilities.

Between hall B and C, an 11m-deep truss accommodates the roof height change.

Weighing more than 50t, the 11m-deep truss has a span of 60m and deflections would have been onerous taking into

The footbridge will link the exhibition centre and its attached hotel with the existing arena

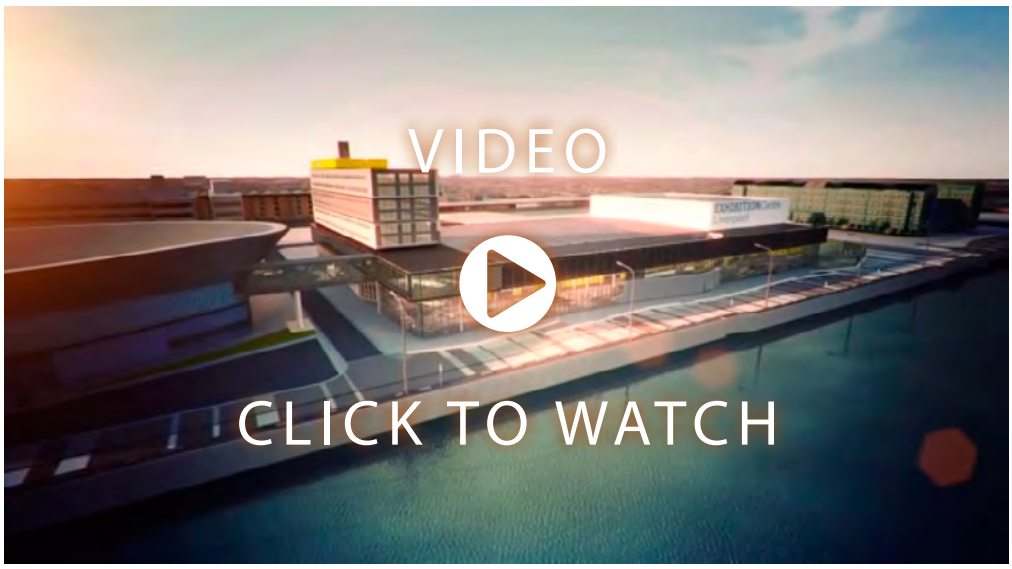

Three halls can be used as one large space or sub-divided into individual areas

account the sliding partition between hall B and C. To support the partitions cost effectively an independent truss does the job. It is restrained laterally by the 11m-deep truss, but takes no load from the rigging primary loading.

For the steel erection Billington Structures had to bring the 11m-deep truss to site in sections, which were then lifted by a 50t mobile crane to form the finished item. Temporary columns were installed to provide stability during this part of the erection programme.

For the roof erection Billington brought the steelwork to site in 20m-long transportable sections.

"Using two 60t capacity crawler cranes the truss erection procedure involved lifting two 20m-long sections into the air, bolting them together and then, with one crane holding both sections, the other was able to lift up the third section that was bolted on to complete the truss. Both cranes then lifted the completed 60m-long truss into place," explains James Hindley, Billington Structures Project Manager.

Including the supporting columns and interconnecting bracings (which provide the majority of the structure's stability), Billington says each hall took approximately four weeks to fully erect.

Practical completion of the ECL is expected in summer 2015, with the official opening approximately six months later in the winter. In its first year of operation it is expected to host about 50 events and attract more than 250,000 visitors.

ASD metal services

klöckner & co multi metal distribution

ASD Westok T&I Line

Plate Girders | Box Girders | Asymmetric | Curved | Cambered | Tapered |Tee Section

Any Shape, Length, Width, Height & Web Aperture

Plate girders manufactured using advanced welding technology on our submerged-arc T & I line.

T&I Line Capabilities

Height:	2000mm (Flange Inc.)
Weight:	1.9 Tonne p/m
Length:	22m
Thickness:	50mm (Web) 100mm (Flange)

ASD Westok

CE Marking to BS EN 1090-2 EXC 4

1918

ENTRUSTED TO DESIGN & DELIVER METAL SOLUTIONS

Call us today on: 0113 205 5270 | or email us at: info@asdwestok.co.uk | www.asdwestok.co.uk

Cellular beams have been used for service integration

Bespoke construction for upmarket site

Situated on the corner of two renowned central London streets, a new retail and office development is set to be a sought after address.

Mayfair in central London is known for its prestigious retail outlets, high-class restaurants, luxury penthouses as well as headquarters for some of the world's most illustrious companies.

The property market is buoyant in this part of the capital and a number of new retail and commercial developments are currently under way. A prime example is a new six-storey development on the corner of Conduit Street and Savile Row.

Bespoke excellence in the heart of Mayfair is how EPR Architects describes the project (see box). "Our design creates exceptional new office and retail space within a beautiful hand-glazed façade that seamlessly matches its surroundings," says Stephen Pey, EPR Associate Director. "While a unique slim steel construction accommodates the tight cladding tolerances and maximises the internal floor areas."

The landmark development replaces two former retail/gallery/office buildings with one large new building. The new build consists of a basement, ground floor and a first floor to accommodate 743m² prime retail space, five upper office levels with an overall floor area of 3,900m² and a rooftop plant deck.

The topmost office floor is stepped back slightly, allowing the structure to fit into its surroundings with a similar design to its neighbours, while also creating a terrace for the future occupants.

"This is a very prestigious project in a very sought after location," says Andy Case, Site Manager for main contractor McLaren Construction. "By demolishing the two old buildings and combining the sites into one, we've maximised the plot efficiently and cost effectively."

McLaren started clearing the site during the summer of 2013. Early works also included enlarging the existing basement to cover the entire site's footprint.

Upwards from the basement slab the structure is formed with a steel frame that uses a centrally positioned reinforced concrete core as well as perimeter bracing for its stability.

"A steel frame was the best option for this site," explains Pal Seyan, Capita Project Engineer. "Early in the design process the project team evaluated all framing options; by using steel we have been able to deal with the site's constraints as well as maximising the number of floors."

All of the floors have been erected using slim 450mm deep Westok cellular beams. They span a long grid arrangement of up to 10m, and this has reduced the number of internal columns to one, allowing architectural freedom within the building. Importantly the passage of the services through the web of the Westok beams has

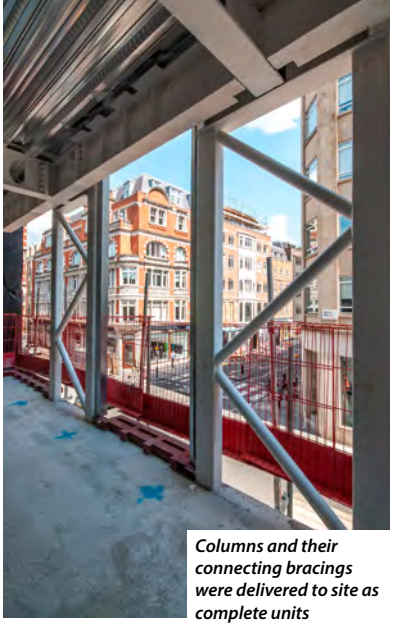

Columns and their connecting bracings were delivered to site as complete units

reduced the floor depth and allowed the structure to have the optimum number of floors.

One of the biggest constraints for this project, as for many inner city construction jobs, has been space, or the lack of it. Roads along two elevations and existing properties abutting the other two sides leave no room for materials storage and scant room for deliveries.

All deliveries are made via the site's laydown zone on Savile Row. Coordination is key and steel deliveries have all been made on a just-in-time basis. Using the site's one tower crane, steel sections are invariably lifted straight off of the delivery truck and then erected almost immediately.

"Because the site is very confined we had to erect the steelwork in phases, doing half the building from basement to third floor, using the vacant part of the site for temporary steel laydown," says Bobby McCormick, BHC Project Manager. "Once the first half of the structure was up, including the metal decking and concrete topping, we then erected the other half using the completed frame for steel laydown."

BHC then repeated this sequence for the rest of the structure from levels three to six, with the rooftop plant area done as the final piece in the steel programme.

A slim construction approach has also been incorporated in the design of the project's perimeter columns. These are twin RHS sections connected by CHS bracing, designed to be as slim as possible in order to fit the architectural vision and to maximise floor space by being unobtrusive.

The columns resemble trusses and were delivered to site in three-storey lengths, fully assembled with their connecting bracing.

By utilising offsite construction the project team has benefitted from a quicker erection programme, while erecting three-storey high elements has also meant the tight tolerances for the cladding have been easier to accommodate as line and levelling didn't need to be done on each floor level.

49-51 Conduit Street completes this month (October).

The project's ground floor will be occupied by a prestigious retailer

FACT FILE
49-51 Conduit Street, London
Main client: Aerium and Terrace Hill Group
Architect: EPR Architects
Main contractor: McLaren Construction
Structural engineer: Capita
Steelwork contractor: BHC
Steel tonnage: 300t

Feature windows

According to EPR Architects the project's architecture wholly integrates art into the fabric of the building by using a bespoke glazed ceramic tile to the main elevations. The approach was developed in collaboration with renowned ceramic artist Kate Malone, adding richness and intensity to the building.

The use of projecting and recessed window treatments addressing Savile Row and Conduit Street provides depth to the façade, enhancing the unique hand glazed elevations.

These feature windows are formed with cantilevering box section and angle section frames that have been bolted to the perimeter floor beams.

The grain of the Mayfair Conservation area is further reflected in the façade treatment through the use of ceramic tones, preserving the historic plot widths created when Savile Row was extended to meet Conduit Street in the 1960's.

The building's strong identity draws on this character and culture within Savile Row celebrating the prestigious arts and crafts nature of the local historic area synonymous with tailoring traditions.

FACT FILE
Manchester Victoria station redevelopment
Main client: Network Rail
Architect: BDP
Main contractor: Morgan Sindall
Structural engineer: Hyder Consulting
Steelwork contractor: Severfield
Steel tonnage: 1,900t

Steel ribs span station restoration

The centrepiece of Manchester Victoria station's restoration and conversion into a regional transportation hub is a curving steel framed roof. Martin Cooper reports.

Part of a wider rail improvement programme in the north of England, Manchester Victoria station is undergoing a £44M redevelopment to make it safer, brighter, more spacious and a fitting transportation hub for the 21st Century.

The station dates back to 1844 and in recent times its large train shed had fallen into a state of disrepair, so much so that in 2009 a report commissioned by the Department for Transport labelled it Britain's 'worst station'.

A central part to the redevelopment plans is a huge steel framed curving ETFE clad replacement roof structure which will cover not only two terminating railway platforms and the main station concourse, but also the Metrolink tram stops, as well as entrances to the adjacent Manchester Arena.

The works are being undertaken without any disruption to rail services or to the Metrolink tram lines that run through the site. The only discernible alteration to local transport links is the fact that tram passengers cannot alight at Victoria but have to use the nearby Shude Hill stop for the duration of the construction programme. "Keeping the station functioning is one of our biggest challenges," says Faisal Farooq, Network Rail Scheme Project Manager. "Most of the work can be done during the day, but in order not to disrupt transport we have to lift steel roof rafters and their columns into place during three-hour night time rail possessions."

Main contractor Morgan Sindall completed demolition of the station's old wrought iron roof last year and work to erect the new structure started last May. As well as this work the project team has also completed an extensive groundworks programme, while refurbishments including work to the Grade ll listed station buildings will continue into next year.

On plan the new roof structure infills an L-shaped area bounded on two sides by the existing station buildings and the Manchester Arena. The structure then curves along its front elevation to link these two buildings.

"The curve in the roof structure aligns with the Metrolink tram lines and brings them into the new transport hub," explains Ronan Connelly, BDP Lead Architect.

The roof is formed with 15 curved steel ribs that are bolted to 4m-high concrete buttresses at ground level and then arch over the station to be supported on 18m-high CHS columns.

"All of the ribs then cantilever from the columns towards the existing station buildings without actually touching them,"

"Most of the work can be done during the day, but in order not to disrupt transport we have to lift steel roof rafters and their columns into place during three hour night time rail possessions."

explains Gary Dooley, Severfield Project Manager. "The idea was to avoid putting extra loads on to these listed buildings."

The steel ribs are fabricated from box sections, 1.2m deep and 500mm wide with 50mm thick top and bottom flanges and 20mm thick side plates. Each of these ribs is made up of welded sections that are up to 27m long.

After fabrication at Severfield's Bolton facility, the rib sections were delivered to site and then welded together to form a single rib, weighing up 86t and with the longest being 96m.

On site Severfield had just enough space for an assembly area that included a system of trestles that allowed five ribs to be welded and stored simultaneously.

The erection process was conducted in three tranches, with five ribs erected in each. Each rib was lifted as a single piece and connected at buttress and column locations simultaneously.

"For the installation of the first five ribs we used a mobile crane as we could get close to their final position. However, all of the other ribs are further away from the assembly area so we needed to bring one of the UK's largest crawler cranes on to site," says Mr Dooley.

The crane in question is a huge 750t-capacity crawler crane with a maximum reach of 106m, which was easily sufficient to lift any of the ribs into place.

All of the ribs were erected during one of the project team's three-hour possessions. Each rib was installed along with its supporting column and enough purlins (secondary steelwork) to connect to the adjacent rib and make the section stable.

The ribs are precambered so that when it deflects under its own self-weight, it pulls the member into its final geometry. The supporting CHS columns have been designed to lean towards the buttress in the temporary condition so that, as each rib is lowered and adjusts under its self-weight, the column is brought to plumb. Only then could the column base and buttress connections be made permanent.

The steel erection programme was completed in early September, and the entire station project will be finished in spring 2015.

After assembly the ribs are lifted into place in one piece

Choice of material

"We looked at a number of materials such as timber, but steel offered a quicker erection programme and the best way of achieving the required long spans ," says Ronan Connelly, BDP Lead Architect.

"We then chose to use steel box section ribs as they are economical and provide fewer ledges for pigeons to roost upon than trusses."

A lightweight structure was also important as a culvert runs under the site and this, as well as the site's railway tracks, limit the locations where columns could be placed.

Choosing lightweight ETFE cladding has also allowed the steel ribs to span further than if glazing had been specified.

Steel scores for stadium upgrade

Steelwork played a central role in allowing Cardiff City's stadium to remain open throughout the construction of a new upper tier to its Ninian Stand.

FACT FILE
Cardiff City Stadium
Main client: Cardiff City Football Club
Architect: Arup
Main contractor: Buckingham Group Contracting
Structural engineer: SKM (Jacobs)
Steelwork contractor: Mabey Structures
Steel tonnage: 1,300t

Cardiff City FC may be spending this season in the Championship, but that has not stopped the club showing Premiership ambitions with the completion of a major upgrade of its Cardiff City Stadium

Completed in time for the August kick-off of the 2014-15 season, the capacity of the stadium has been increased from 28,050 to just under 33,500 with the expansion of the Ninian Stand.

Just over 5,000 new seats are located on a new upper tier along with boxes and corporate hospitality facilities attached to new concourse areas spread over two levels. A new 42.5m-wide cantilevering roof, which shelters both the lower and upper tiers, has also been constructed.

Opened in 2009, the Cardiff City Stadium is the second largest stadium in Wales and the owners have always anticipated a gradual enlargement of the arena.

Most of the project was completed during the previous season in such a way that no disruption was caused to the daily working of the stadium, as it remained fully functional throughout the works.

As Cardiff City FC Director Steve Borley explains: "The original stadium design was built in a way to ensure that any expansion could be made with minimal effect and disruption to the current structure and our supporters.

"Any expansions would always have to be started during the season and this stadium has allowed us to do that without affecting our capacity levels."

The existing stadium and the new tier are both formed with structural steelwork and this has helped the construction programme, as, a few alterations aside, the new steel structure and roof have been bolted straight onto the original steel frame.

SKM (now Jacobs) was the project structural engineer responsible for the steel design, while Arup – designers of the original steel frame – were project architect and had responsibility for overseeing foundation and floor slab design.

Mabey Structures, a new specialist business created by Mabey Bridge, was the steelwork contractor and began work in September 2013. Its approach included several key considerations such as safety of users of the stadium during construction, and the scheduling of work that had to stop and start either side of home matches.

Work on the new tier was never carried out on a Saturday match day, and prior to a game all site entrances and materials were safely secured. The existing roof was kept in place during the season, with the new structure erected behind and above it. This allowed the stand to remain in operation throughout the construction programme.

Working on behalf of main contractor Buckingham, the steel fabrication was initially undertaken during January and February this year.

The new upper tier takes shape

"We erected the remainder of the steelwork during the football season, while the existing roof was in place. Once the season had finished the existing roof was demolished and we were then able to erect the remainder of the new roof," explains Paul Benwell, Mabey Structures Technical Manager.

The first step in the installation of the new steelwork was the insertion of steel beams into the existing structure at the rear of the lower terrace.

"Some bracings had to be removed and new beams installed for revisions to the lower tier," says Mr Benwell.

A new 106m-long two-storey beam and column structure was then constructed behind the back of the current stand to accommodate concourses and refreshment outlets. It is two bays deep and based around a grid pattern of 10.5m × 7.1m.

This structure supports the new upper tier that cantilevers 7m over the existing lower tier and is formed with tapered fabricated plate girders.

"These cantilever sections were

The new tier was built during the season with no disruption to the spectators using the lower part of the stand

An important part of Mabey Structures' technical challenge was the design of bespoke connections between the steel members, as well as checking the construction stage stability of the structure and designing the temporary works necessary for erection of the structure.

specifically designed to provide the necessary stiffness to limit dynamic response under crowd loading," says Paul Hill, SKM (Jacobs) Lead Engineer. "And consideration was given to the connections to allow these elements to be constructed only after the existing roof had been removed."

The new roof cantilevers in total 42.5m, but only the 10.5m backspan and about 19m of the cantilever could be erected during the football season. This portion of the roof was erected in modules comprising a rafter, the supporting mast, the 14m-long backstay and the connecting inner forestay.

The top of the mast is 12m above the new roof level and 37m above ground level. It is formed with 457mm diameter CHS sections, while the connecting forestays and backstays are all 406mm diameter CHS sections.

Immediately after the last home match of the season, the existing roof and its supporting columns were removed which then allowed the the front portion of the new roof, along with the connecting 34m long front forestay, to be erected.

"The roof is too long to have been erected without spliced rafters and forestays, so it was designed with bolted connections at the optimum position to suit temporary stability and the necessary two-stage erection programme," adds Mr Hill.

The football season has now well and truly begun and Cardiff City is hoping for bumper crowds to fill their enlarged stadium. On 12 August, the enlarged venue hosted its first major game as the stadium was filled to capacity for the UEFA Super Cup, between last season's Champions League winners – Real Madrid – and last season's Europa League champions – Sevilla.

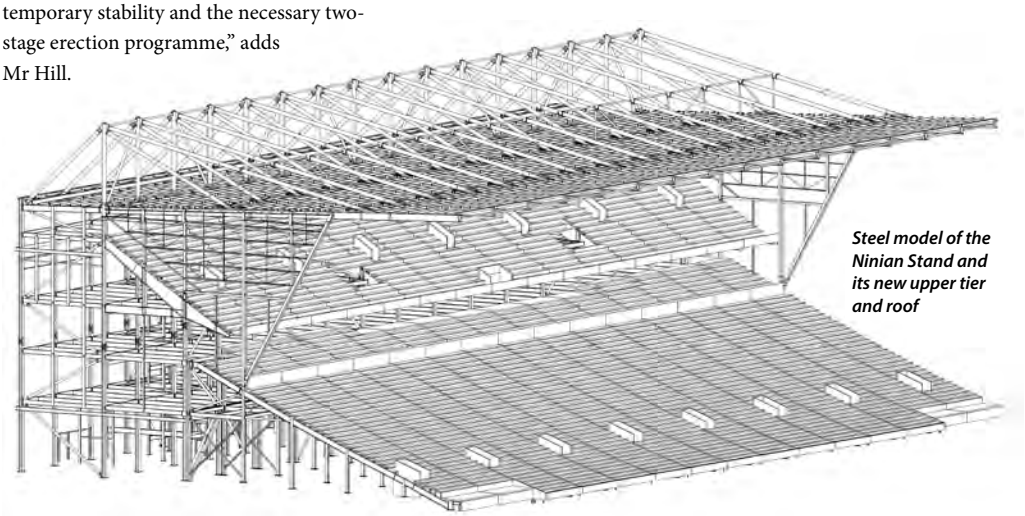

Steel model of the Ninian Stand and its new upper tier and roof

Primary schools in the frame

Two primary schools in Perth have reaped the benefits of having structural steel frames.

FACT FILE
Crieff Primary School & Oakbank Primary School, Perth
Main client: Hub East Central Scotland
Architect: Holmes Miller
Main contractor: BAM Construction
Structural engineer: Blyth+Blyth
Steelwork contractor: Hescott Engineering Co
Steel tonnage: 385
Project value: £17M

The education sector in Perth is set to get a boost with the construction of two new schools that will accommodate more than 1,000 nursery and primary pupils in modern state-of-the-art facilities.

Main contractor BAM Construction is building both Oakbank Primary School and Crieff Primary School for Perth and Kinross Council as part of its capital investment programme that is being delivered through Hub East Central Scotland.

Both new schools have been designed as steel-framed structures and are being constructed simultaneously, with Hescott Engineering Co erecting 385t of structural steel for the projects, as well as installing metal decking and precast stairs.

A number of factors favoured the use of structural steelwork for the project's framing material says Craig Heap, Holmes Miller Project Architect. "It's a tried and tested method with the benefits of a quick construction programme, flexibility of design, while the material lends itself to forming the long spans that were needed in the gyms and assembly halls."

Jim Travers, Blyth+Blyth Director, agrees and adds: "There's always a strong preference for using steel for schools as flexibility of design is important. Schools quite often have a number of end-users and so the building's configuration may need to be altered and this is easier with a steel frame."

The steelwork for both schools gets its stability from bracing, located in partition and exterior walls and stair cores. The need for flexibility meant that during the design process a lot of thought had to go into where bracing could and could not be placed.

"The bracing locations were dictated by the size and use of each classroom," adds Mr Travers.

Avoiding any clashes and making sure the entire design team agreed on all aspects, including bracing locations, was aided by the fact that all parties took a BIM approach.

3D Revit models of both schools were produced early in the design process and the architect, main contractor and the structural engineer all used them. Later the same models were passed onto Hescott Engineering Co who then used them to design the steel connections.

Primary locations

Located on the playing fields of the existing school, the new 4,000m² Oakbank Primary will include an integrated nursery, roof terrace, learning resource centre, a general-purpose room and break-out areas around the main flexible teaching spaces.

Predominantly two-storey, Oakbank is square-shaped in plan with four protruding classroom finger blocks attached to the main structure. The steel frame is based around a fairly regular 8m × 8m grid pattern, with the only exception being 19.7m spans for the school's gym and assembly hall. This area has a sliding partition that allows it to be divided into two separate halls.

"Oakbank is the more complicated of the two projects as far as logistics are concerned," says Martin Cooper, BAM's Construction Director. "As we are working adjacent to a functioning school vehicle movements and material deliveries have to be timed in order to cause minimal

Steel goes up at Oakbank Primary School

"There's always a strong preference for using steel for schools as flexibility of design is important."

disruption to pupils and staff.

Once the new Oakbank Primary School is completed the existing school will be demolished to make room for new playing fields.

Meanwhile, the Crieff Primary school project is being built on a greenfield site on the outskirts of Perth.

With a similar two-storey steel design to Oakbank, the Crieff Primary School is however rectangular in plan, with many of the teaching spaces set around a central gym/assembly hall and a one-storey entrance hall.

A standard grid pattern has also been utilised on this project with the longest spans – 19.8m – occurring in the sports hall.

This primary school and nursery will be complemented by associated facilities including sports pitches, multi-use games area and playground. Biomass boilers will provide heating and hot water and reduce the carbon footprint of the new school.

Both schools are scheduled to open in time for the 2015 autumn term.

Visualisation of Crieff Primary School

Fabrication machinery aids steel programme

Prior to beginning work on the Perth primary schools Hescott Engineering purchased a new FICEP Endeavour drilling and sawing line and claims it helped double production with the faster speed and improved technology provided by the new machine.

Chris Scott, Hescott Engineering Director, says: "The Endeavour's advanced capability and the extra 250mm axis on the drilling machine, combined with improved speed of the FICEP Katana sawing system, has not only provided a substantial boost to our productivity but is giving us a welcome extra competitive edge in the Scottish market.

"One particular job that used to take 30 minutes now takes only eight minutes with the Endeavour. With its power and innovative features, the new line is a game changer for us in terms of capacity and quality."

Left: Crieff is being built on a greenfield site on the outskirts of Perth

Below: Steel model of Oakbank School showing its configuration based around a central hub

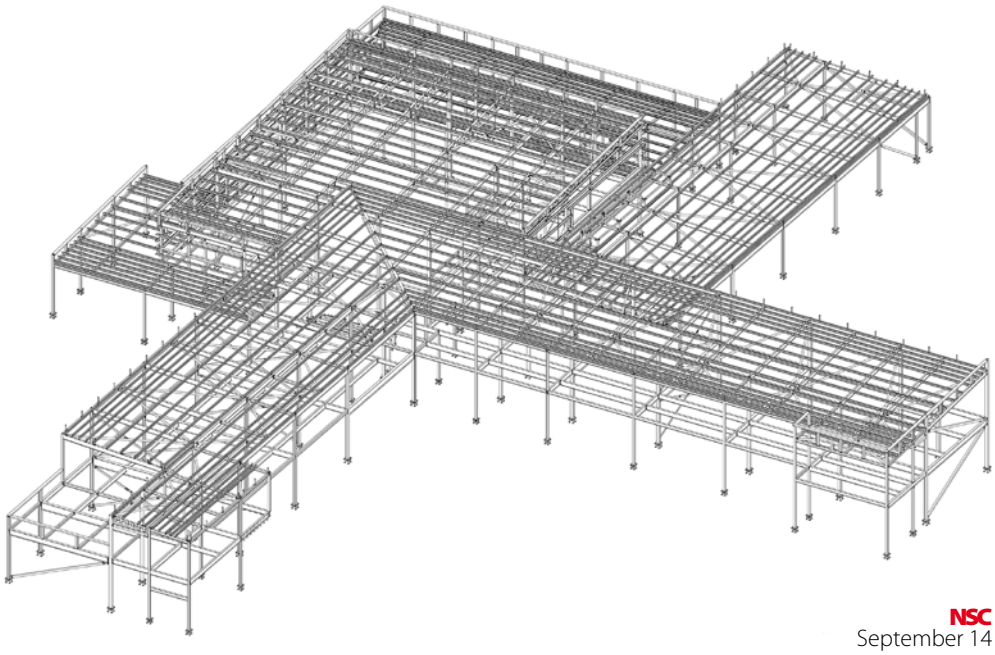

Tata Steel proves 'Very Go responsible sourcing

Tata Steel's UK manufactured products have achieved BES 6001 'Very Good' providing proof that they have been responsibly produced.

Construction industry clients are increasingly asking suppliers to prove that their products have been responsibly sourced.

Main contractors, architects and engineering designers are in turn asking their supply chains probing questions about this vital element of sustainability, and the onus is on manufacturers to prove that their products have been responsibly produced and their constituent materials responsibly sourced.

All of the responsible sourcing questions can be answered with confidence for steel construction using Tata Steel products manufactured in the UK, thanks to the company's pioneering efforts in becoming one of the largest companies, with a very complex supply chain, to have achieved certification to BRE's sustainability standard, BES 6001. Designers can specify Tata Steel products with confidence that they are now certified 'Very Good' under the standard. The certification includes all structural products such as Advance steel sections, Celsius structural hollow sections, RoofDek and ComFlor decking, and also covers building envelope products such as Trisomet, Trimapanel and Catnic building products. Colorcoat branded products from Tata Steel, Colorcoat Prisma and Colorcoat HPS200 Ultra, have been certified to the standard since 2010.

A major plus for developers and builders of steel framed buildings is that BES 6001 provides, at no extra cost, a route to obtaining the maximum number of credits available in the Responsible Sourcing of Materials section of BREEAM for materials that are not being re-used. They can also assure their clients, who are looking for independent third party certified assurance, that the supply chains they are using are responsible. Products certified to BES 6001 are made in facilities pursuing environmental programmes covering,

Tata Steel can prove its raw materials are sourced from suppliers with high environmental procedures in place

amongst other things, greenhouse gas emissions and waste reduction. Moreover, BES 6001 requires that the constituent materials in construction products have been traced to known responsible sources, in the case of steel, as far back as the point of mineral extraction.

Government funded projects in the near future will increasingly demand the use of BES 6001 certified products and private developers are keen to show their commitment to sustainability, so Tata Steel is providing its own customers, mostly steelwork contractor members of the BCSA, with a competitive lead as the insistence on using BES 6001 products grows.

Achieving responsible sourcing certification might be relatively straight forward for some construction products, particularly those that use only local materials, but for a major, integrated multi-national steel manufacturer like Tata Steel, supplying a wide range of construction products, the task is of a greater magnitude than has been attempted before.

Colorcoat products manufactured at Tata Steel's Shotton plant were the first BES 6001 certified pre-finished steel manufactured products available to the market.

Tata Steel Europe Head of Environmental Policy and Strategy, Peter Quinn said achieving the certification over a six-month period has been a highly complex task that has involved a multi-functional approach within the company.

"Tata Steel is leading the way with responsible sourcing and takes its environmental and social responsibilities very seriously. It is not always easy to validate green credentials, but BES 6001 is an independent standard recognising companies that go that step further to achieve sustainability. The standard not only assesses the sustainability of our own operations, it also requires us to demonstrate confidence in the responsibility of our raw material suppliers as far back as mineral extraction."

This is a particularly onerous task for Tata Steel as its predominant raw material, iron, comes from a number of sources globally, in the form of iron ore fines, lump and pellet as well as scrap. In the case of ore, this is brought into the UK via a number of ports and then travels on to integrated steelworks to be made into steel. Extensive calculations were carried out to determine the contribution of each source of supply to an average tonne of construction steel. From this Tata Steel was able to prove that 100% of traceable materials came from suppliers with high standards of environmental stewardship, human rights adherence and health and safety management.

Having assessed the raw material supply, the next area of focus was on Tata Steel's own internal policies and processes.

Mr Quinn continued: "The auditor from BSI had access to the robust environmental, quality and health and safety management systems we have had in place, albeit subject to continuous improvement, for many years. This helped us hugely in securing certification, and indeed there was no need to introduce any new management systems."

Tata Steel has a comprehensive range of sustainability related policies and practices in operation across all of its plants and operations. Underneath a comprehensive policy framework setting out its commitments, and the management systems described above, it has implemented processes such as a new energy efficiency governance mechanism across its operations, investments to ensure compliance with government zero waste policies, strategies for monitoring and reviewing water use, policies to reduce transport impacts, a focus on the health and safety and the skills development of employees, and a company-wide focus on having a positive impact on their local communities.

Mr Quinn added: "What it all means is that when our customers ask us questions about responsibility in the supply chain and

BES6001 provides, at no extra cost, a route to obtaining the maximum number of credits available in the Responsible Sourcing of Materials sections of BREEAM for materials that are not being re-used

Kids of Steel, part of Tata Steel's Community Partnership Programme, has given nearly 60,000 children the opportunity to have a fun, positive experience of sport.

Tata Steel's certification helped Speller Metcalfe achieve the highest BREEAM 'Outstanding' rating in the world

our own manufacturing systems we have strong, independently verified proof to back up our answers."

Jonathan Clemens, Tata Steel's Head of Marketing, Construction & Infrastructure, said: "Having our construction products certified to BES 6001 enables us to benchmark our sustainability performance in the construction sector and demonstrate that we are continually improving in this area. We now supply the widest range of construction products certified to BES 6001 and in the case of certain construction products, such as Celsius structural hollow sections and ComFlor composite floor decking, we are the first company to have acquired this certification. As a result, more than any other steel supplier, we can offer specifiers, contractors and building owners the reassurance they need when meeting the UK Government's requirements for sustainable development. Many of our customers will be on their own journeys towards achieving BES 6001 and they will be reassured to learn that we have already done much of the hard work for them."

To obtain a copy of Tata Steel's certificate please email construction@tatasteel.com or call +44 (0)1724 405060

The responsible standard

BES 6001 has been developed by BRE to enable construction product manufacturers to demonstrate their commitment to sustainability. Responsible Sourcing of Construction Products is described by BRE as providing a holistic approach to managing a product from the point at which component materials are mined or harvested, through manufacture and processing.

The standard provides a framework for the organisational governance, supply chain management and environmental and social issues that need to be addressed for construction products to be properly regarded as having been responsibly sourced.

BES 6001 provides an independently assessed standard demonstrating a specific level of sustainability performance, making it one of the key ways that manufacturers like Tata Steel can validate their sustainability claims.

Responsible sourcing is demonstrated through an ethos of supply chain management and product stewardship encompassing social, economic and environmental dimensions – it is the Triple Bottom Line of sustainability applied to responsible sourcing.

The certification process involves looking at stakeholder engagement, labour practices and the management of upstream supply chains. Requirements of certification include organisational management, supply chain management and environmental and social issues. Some elements must be satisfied for any certification to be granted, and higher levels of compliance can result in higher performance ratings being awarded.

Tata Steel Europe has led the way in the steel sector, with Colorcoat products manufactured at its Shotton plant being the first BES 6001 certified pre-finished steel manufactured products available to the market. Initial certification was secured in 2010 and they have since been recertified to a 'Very Good' rating in 2011, 2012, and 2013.

BREEAM and the Code for Sustainable Homes grants extra credits in their assessments for products that achieve BES 6001 'Very Good' or 'Excellent' ratings.

Thermal bridging in steel framed buildings

Mark Lawson and Guillaume Vannier of SCI report on the results of an EU project

Figure 1 : Light steel infill walls in a steel framed structure

In the residential sector, satisfying the energy conservation requirements of the Building Regulations Part L1 is increasingly challenging and affects the detailed design of these buildings, particularly at interfaces between components in the façade and roof. In multi-storey residential and mixed use buildings, steel frames are often used because of their well-known benefits of speed of construction and lighter weight in comparison to concrete construction. Multi-storey frames are often combined with light steel infill walls in the façade that also support lightweight cladding, such as insulated render and rain screen systems. An example of infill walling used within a composite steel frame residential building is shown in Figure 1.

In housing, a considerable amount of work has gone into assessing the thermal bridging that occurs in typical junctions and at foundations in order to calculate their cumulative effect on the whole building energy performance. This has resulted in a range of Accredited Construction Details for all materials that cover many common design details in housing.

The parameter which is used to take account of the combined effect of all thermal bridges is known as the y-value. This has the same units as the U value of the individual walls and roof etc and effectively adds to the U value. A building with low thermal bridging has a y-value of about 0.04 W/m^{2}K, a building with reasonable control of thermal bridging has a y-value of about 0.08 W/m^{2}K, and the default case without special consideration of thermal bridging has a y-value of about 0.12 W/m^{2}K. This may be compared to an overall heat loss parameter (of the walls, roof, windows etc) of about 0.5 W/m^{2}K expressed over the whole building envelope, and so the effect of thermal bridging can add 10 to 30% to the heat loss due to conduction through the building envelope.

In the case of multi-storey residential buildings, little work has been carried out to determine the effect of thermal bridging. In the case of steel frames with infill walls, the steel edge beams and columns bridge the insulating later to some extent because the mineral wool insulation that is placed between the C section of the infill wall is not continuous at the lines of the steel beams, floor slab and columns.

▶30

SCI together with Oxford Brookes University has recently completed an EU research project with the working title of TABASCO, which had the objective of analysing thermal bridging effects in a wide variety of steel structures and cladding systems. Examples of these analyses for two typical cases relevant to steel framed construction are presented below.

1. Steel edge beams with insulated render cladding

The heat flow through a façade of a steel framed building with insulated render cladding is shown in Figure 2 for a 300mm deep edge beam supporting a 130mm deep composite floor slab and for a 20°C temperature difference between inside and outside. The insulated layer outside the structure is taken as Expanded Polystyrene (EPS) which is often used in these cladding systems. The infill walls use 100 × 1.6mm Cs at 600mm centres with mineral wool in between. The results are expressed in terms of the linear thermal transmittance ψ in W/mK at the beam line, and an f_{RSI} parameter, which defines the 'cold spots' on the surface, as shown in Table 1 for various thicknesses of EPS insulation. An f_{RSI} value of 0.9 corresponds to a local temperature of 18°C on the room surface, and a value of 0.95 to a local temperature of 19°C. In both cases, the f_{RSI} values will not lead to local condensation and so are acceptable.

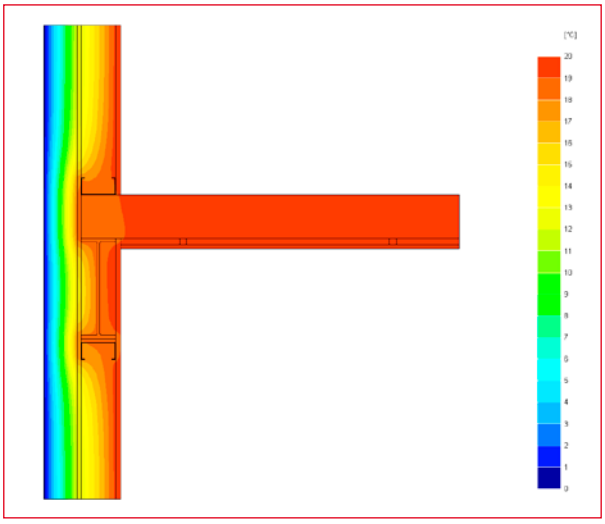

Figure 2: Thermal profile at an edge beam for a light steel infill wall with insulated render cladding

EPS thickness (mm) outside the C sections in the external wall	f_{RSI}	Linear thermal transmittance ψ W/mK
60	0.913	0.994
80	0.927	0.066
100	0.936	0.049
120	0.944	0.037

Table 1: Linear thermal bridging at an edge beam with EPS insulation externally

For 100mm of EPS externally which leads to a basic U value of 0.2 W/m²K, the ψ value at the beam line is about 0.05 W/mK. Dividing the ψ value by a floor to floor height of 3.5m leads to an increase in the effective U value of the wall of 0.014 W/m²K. This represents about a 7% additional heat loss in relation to the basic U value of the wall.

2. Steel H-section column in wall

Consider the case of a 200mm UKC column located within a light steel infill wall and with insulated render cladding using EPS insulation with a sheathing board external to the steel column. Mineral wool is contained between the C sections in the wall. The steel column is encased in a single layer of plasterboard for 30 minutes fire resistance. Two cases are considered: with or without mineral wool placed between the flanges of the steel H-section. The thermal profile for the case with mineral wool between the flanges is shown in Figure 3.

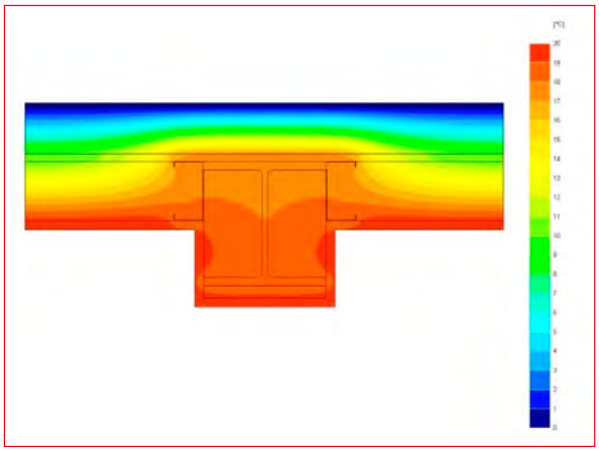

Figure 3: Thermal profile of steel column in an infill wall with mineral wool between the flanges

The linear thermal transmittance ψ is presented in Table 2 for the two cases. The linear thermal transmittance ψ is 0.055 W/mK for a column in a wall with a U value of 0.2 W/m²K, which is similar to the case of an edge beam. There is little difference between the cases with and without mineral wool infill. Dividing the ψ value by a column spacing of 6m gives an increase in the effective U value of the wall of 0.01 W/m²K, which is again relatively small and will add about 5% to the heat loss through the wall.

EPS thickness (mm) outside the C sections in the external wall	No insulation between flanges of steel section		With insulation between flanges of steel section
	f_{RSI}	Linear thermal transmittance ψ W/mK	Linear thermal transmittance ψ W/mK
60	0.932	0.103	0.098
80	0.946	0.074	0.070
100	0.954	0.055	0.053
120	0.961	0.044	0.042

Table 2: Linear thermal bridging for a 203UKC column in a wall with EPS insulation externally

The results show that thermal bridging can be determined in steel framed structures and leads to relatively low additional heat loss. Other cases examined in TABASCO were steel beams supporting brickwork by stainless steel angles and brackets, slim floor edge beams, rectangular hollow section edge beams and columns, and single point penetrations.

For more information on the results of TABASCO and capabilities in thermal modelling, contact Guillaume Vannier at SCI on 01344 636525.

Scunthorpe Civic Centre

an unusual design

FROM BUILDING WITH STEEL MAY 1964

A typical example of the use of steelwork in municipal buildings is provided by the recently completed Scunthorpe Civic Centre, which consists of an administration block and a Council Chamber block. The former uses 250 tons of steelwork and the latter 45 tons.

The 275-ft long administrative unit, a four-storey building of conventional type office block construction, is of interest because it is one of the earliest buildings to include universal beam and column sections to BS 4: 1962. The frame work is of basic beam and column construction and is not a continuous frame. All columns and beams are concrete encased and clad externally with blue fine-rubbed slate.

The Council Chamber is of particular interest because of its horseshoe shape and the design of the roof. Both the walls of the chamber and the external facing brick panels are load bearing, the latter carrying beams with *in-situ* concrete floors spanning across the main chamber walls.

The steel frame to the roof of the main chamber is supported by a 'bicycle wheel' system of steel trusses comprising a central thrust ring supporting radial lattice girders spanning across to the bearings. A centrally positioned steel ventilation shaft has been designed to incorporate the supporting rings in its general outlines and, in effect, acts as the 'hub' of the wheel.

Charles B. Pearson, Son & Partners were the architects responsible for the design of these buildings and the supervisory structural engineers Ove Arup & Partners.

The illustrations below show steelwork under construction and the finished main Council Chamber. The 'hub' under the bicycle wheel construction is above the council chamber.

Steelwork contractors for buildings

Membership of BCSA is open to any Steelwork Contractor who has a fabrication facility within the United Kingdom or Republic of Ireland. Details of BCSA membership and services can be obtained from
Gillian Mitchell MBE, Deputy Director General, BCSA, 4 Whitehall Court, London SW1A 2ES
Tel: 020 7747 8121 Email: *gillian.mitchell@steelconstruction.org*

Applicants may be registered in one or more Buildings category to undertake the fabrication and the responsibility for any design and erection of:

- **C** Heavy industrial platework for plant structures, bunkers, hoppers, silos etc
- **D** High rise buildings (offices etc over 15 storeys)
- **E** Large span portals (over 30m)
- **F** Medium/small span portals (up to 30m) and low rise buildings (up to 4 storeys)
- **G** Medium rise buildings (from 5 to 15 storeys)
- **H** Large span trusswork (over 20m)
- **J** Tubular steelwork where tubular construction forms a major part of the structure
- **K** Towers and masts
- **L** Architectural steelwork for staircases, balconies, canopies etc
- **M** Frames for machinery, supports for plant and conveyors
- **N** Large grandstands and stadia (over 5000 persons)
- **Q** Specialist fabrication services (eg bending, cellular/castellated beams, plate girders)
- **R** Refurbishment
- **S** Lighter fabrications including fire escapes, ladders and catwalks

FPC Factory Production Control certification to BS EN 1090-1
- **1** – Execution Class 1
- **2** – Execution Class 2
- **3** – Execution Class 3
- **4** – Execution Class 4

QM Quality management certification to ISO 9001
SCM Steel Construction Sustainability Charter
(● = Gold, ● = Silver, ● = Member)

Notes
(1) Contracts which are primarily steelwork but which may include associated works. The steelwork contract value for which a company is pre-qualified under the Scheme is intended to give guidance on the size of steelwork contract that can be undertaken; where a project lasts longer than a year, the value is the proportion of the steelwork contract to be undertaken within a 12 month period.

Where an asterisk (*) appears against any company's classification number, this indicates that the assets required for this classification level are those of the parent company.

Company name	Tel	C	D	E	F	G	H	J	K	L	M	N	Q	R	S	QM	FPC	SCM	Guide Contract Value (1)
A C Bacon Engineering Ltd	01953 850611			●	●		●										2		Up to £2,000,000
A & J Stead Ltd	01653 693742			●	●					●	●			●	●		2		Up to £100,000
Access Design & Engineering	01642 245151				●	●			●	●	●			●	●	✔	2		Up to £4,000,000
Adey Steel Ltd	01509 556677				●	●	●	●		●	●			●	●	✔	3	●	Up to £2,000,000
Adstone Construction Ltd	01905 794561			●	●	●	●									✔	2	●	Up to £3,000,000
Advanced Fabrications Poyle Ltd	01753 653617				●	●	●	●	●	●	●				●		2		Up to £800,000
AJ Engineering & Construction Services Ltd	01309 671919			●	●					●	●			●	●	✔	2		Up to £1,400,000
AKD Contracts Ltd	01322 312203				●					●	●			●	●		2		Up to £100,000
Angle Ring Company Ltd	0121 557 7241												●			✔	4		Up to £1,400,000
Apex Steel Structures Ltd	01268 660828			●	●	●	●			●	●			●			2		Up to £1,400,000
Arminhall Engineering Ltd	01799 524510	●			●					●	●			●	●	✔	2		Up to £400,000
Arromax Structures Ltd	01623 747466	●		●	●	●	●	●	●	●	●	●		●	●		2		Up to £800,000
ASA Steel Structures Ltd	01782 566366			●	●	●	●			●	●			●	●	✔	2		Up to £800,000
ASD Westok Ltd	0113 205 5270												●			✔	4		Up to £6,000,000
ASME Engineering Ltd	020 8966 7150				●	●				●	●			●	●	✔	2	●	Up to £1,400,000
Atlasco Constructional Engineers Ltd	01782 564711			●	●	●	●				●			●	●	✔	2		Up to £1,400,000
Austin-Divall Fabrications Ltd	01903 721950			●	●		●	●		●	●			●	●	✔	2		Up to £800,000
B D Structures Ltd	01942 817770			●	●	●	●				●	●		●		✔	2		Up to £800,000
Ballykine Structural Engineers Ltd	028 9756 2560			●	●	●	●	●				●				✔	4		Up to £1,400,000
Barnshaw Section Benders Ltd	01902 880848												●			✔	4		Up to £800,000
BHC Ltd	01555 840006	●	●	●	●	●	●	●			●	●		●	●	✔	4		Above £6,000,000
Billington Structures Ltd	01226 340666		●	●	●	●	●	●	●	●	●	●		●		✔	4	●	Above £6,000,000
Border Steelwork Structures Ltd	01228 548744			●	●	●	●			●	●				●		2		Up to £3,000,000
Bourne Construction Engineering Ltd	01202 746666		●	●	●	●	●	●	●	●	●	●	●	●	●	✔	4	●	Above £6,000,000
Briton Fabricators Ltd	0115 963 2901	●		●	●	●	●	●	●	●	●			●	●	✔	4		Up to £3,000,000
Builders Beams Ltd	01227 863770				●					●				●	●	✔	2		Up to £400,000
Cairnhill Structures Ltd	01236 449393	●			●	●	●	●	●	●				●	●	✔	4	●	Up to £3,000,000
Caunton Engineering Ltd	01773 531111	●	●	●	●	●	●	●		●	●	●		●	●	✔	4	●	Up to £6,000,000
Cleveland Bridge UK Ltd	01325 381188	●	●	●	●	●	●	●	●	●	●	●		●		✔	4	●	Above £6,000,000*
CMF Ltd	020 8844 0940				●		●	●		●	●				●	✔	2		Up to £6,000,000
Cook Fabrications Ltd	01303 893011				●					●	●			●	●		2		Up to £800,000
Coventry Construction Ltd	024 7646 4484			●	●	●	●	●	●	●	●			●	●	✔	2		Up to £800,000
D H Structures Ltd	01785 246269			●	●		●				●			●			2		Up to £100,000
Discain Project Services Ltd	01604 787276				●					●	●				●	✔	2		Up to £1,400,000
Duggan Steel Ltd	00 353 29 70072		●	●	●	●	●	●			●					✔	4		Up to £4,000,000
ECS Engineering Services Ltd	01773 860001	●		●	●	●	●	●	●	●	●			●	●	✔	3		Up to £2,000,000
Elland Steel Structures Ltd	01422 380262		●	●	●	●	●	●	●	●	●	●		●		✔	4	●	Up to £6,000,000
EvadX Ltd	01745 336413			●	●	●	●	●	●	●	●	●				✔	2	●	Up to £3,000,000
Four Bay Structures Ltd	01603 758141			●	●					●	●			●	●		2		Up to £1,400,000
Gorge Fabrications Ltd	0121 522 5770				●	●	●	●		●				●		✔	2		Up to £800,000
Gregg & Patterson (Engineers) Ltd	028 9061 8131			●	●	●	●	●				●		●		✔	3		Up to £2,000,000
H Young Structures Ltd	01953 601881			●	●	●	●	●			●			●	●	✔	2	●	Up to £2,000,000
Had Fab Ltd	01875 611711				●				●	●	●				●	✔	4		Up to £2,000,000
Hambleton Steel Ltd	01748 810598		●	●	●	●	●	●				●		●		✔	4	●	Up to £2,000,000
Harry Marsh (Engineers) Ltd	0191 510 9797			●	●	●	●				●	●			●	✔	2		Up to £1,400,000
Henry Smith (Constructional Engineers) Ltd	01606 592121			●	●	●	●	●								✔	3		Up to £2,000,000
Company name	Tel	C	D	E	F	G	H	J	K	L	M	N	Q	R	S	QM	FPC	SCM	Guide Contract Value (1)

Company name	Tel	C	D	E	F	G	H	J	K	L	M	N	Q	R	S	QM	FPC	SCM	Guide Contract Value (1)
Hescott Engineering Company Ltd	01324 556610			●	●	●	●			●				●	●	✔	2		Up to £2,000,000
Intersteels Ltd	01322 337766				●	●	●	●					●			✔	3		Up to £2,000,000
J & A Plant Ltd	01942 713511				●	●									●		2		Up to £200,000
James Killelea & Co Ltd	01706 229411		●	●	●	●	●					●		●			4		Up to £6,000,000*
John Reid & Sons (Strucsteel) Ltd	01202 483333		●	●	●	●	●	●	●	●	●	●		●	●	✔	4		Up to £6,000,000
Kiernan Structural Steel Ltd	00 353 43 334 1445			●	●	●	●	●	●	●	●	●		●	●	✔	4	●	Up to £3,000,000
Leach Structural Steelwork Ltd	01995 640133			●	●	●	●	●			●					✔	2	●	Up to £4,000,000
Legge Steel (Fabrications) Ltd	01592 205320			●	●		●		●	●	●			●	●		2		Up to £400,000
Luxtrade Ltd	01902 353182									●	●				●	✔	2		Up to £800,000
M Hasson & Sons Ltd	028 2957 1281			●	●	●	●	●	●	●	●				●	✔	2		Up to £3,000,000
M J Patch Structures Ltd	01275 333431				●					●	●			●		✔	2		Up to £800,000
M&S Engineering Ltd	01461 40111				●				●	●	●			●	●		2		Up to £1,400,000
Mabey Bridge Ltd	01291 623801	●	●	●	●	●	●	●	●	●	●	●	●	●		✔	4	●	Above £6,000,000
Mackay Steelwork & Cladding Ltd	01862 843910			●	●		●			●	●			●	●	✔	4		Up to £800,000
Maldon Marine Ltd	01621 859000				●	●		●	●	●					●	✔	3		Up to £1,400,000
Mifflin Construction Ltd	01568 613311		●	●	●	●	●				●						2		Up to £3,000,000
Murphy International Ltd	00 353 45 431384	●			●		●								●	✔	4		Up to £1,400,000
Newbridge Engineering Ltd	01429 866722			●	●	●	●								●	✔	3		Up to £1,400,000
Nusteel Structures Ltd	01303 268112						●	●	●	●						✔	4		Up to £4,000,000
Overdale Construction Services Ltd	01656 729229			●	●		●	●			●				●		2		Up to £400,000
Painter Brothers Ltd	01432 374400								●		●				●	✔	2	●	Up to £6,000,000
Pencro Structural Engineering Ltd	028 9335 2886			●	●	●	●	●	●		●			●	●	✔	2		Up to £2,000,000
Peter Marshall (Steel Stairs) Ltd	0113 307 6730									●					●	✔	2		Up to £800,000*
PMS Fabrications Ltd	01228 599090			●	●	●	●		●	●	●			●	●	✔	2		Up to £1,400,000
R S Engineering SW Ltd	01579 383131				●					●	●			●	●	✔	2		Up to £100,000
Rippin Ltd	01383 518610			●	●	●	●	●						●	●		2		Up to £1,400,000
S H Structures Ltd	01977 681931						●	●	●	●		●				✔	4	●	Up to £3,000,000
SDM Fabrication Ltd	01354 660895	●	●	●	●	●	●				●			●	●	✔	4		Up to £800,000
Severfield plc	01845 577896	●	●	●	●	●	●	●	●	●	●	●	●	●	●	✔	4	●	Above £6,000,000
Shaun Hodgson Engineering Ltd	01553 766499	●			●		●			●	●			●	●	✔	3		Up to £800,000
Shipley Structures Ltd	01400 251480			●	●	●	●		●	●	●			●	●		2		Up to £1,400,000
Snashall Steel Fabrications Ltd	01300 345588			●	●	●	●	●			●				●		2		Up to £1,400,000
South Durham Structures Ltd	01388 777350			●	●	●				●	●	●			●		2		Up to £800,000
Southern Fabrications (Sussex) Ltd	01243 649000				●					●	●			●	●	✔	2		Up to £800,000
Temple Mill Fabrications Ltd	01623 741720			●	●	●	●				●			●	●	✔	2		Up to £200,000
Traditional Structures Ltd	01922 414172		●	●	●	●	●	●	●		●	●		●	●	✔	2	●	Up to £2,000,000
TSI Structures Ltd	01603 720031			●	●	●	●										2		Up to £1,400,000
Tubecon	01226 345261						●	●	●	●				●	●	✔	4	●	Above £6,000,000*
W & H Steel & Roofing Systems Ltd	00 353 56 444 1855			●	●	●	●	●						●	●		4		Up to £2,000,000
W I G Engineering Ltd	01869 320515				●					●					●	✔	2		Up to £200,000
Walter Watson Ltd	028 4377 8711			●	●	●	●	●				●				✔	2		Up to £6,000,000
Westbury Park Engineering Ltd	01373 825500	●			●		●	●	●	●	●				●	✔	4		Up to £800,000
William Haley Engineering Ltd	01278 760591			●	●	●			●	●	●					✔	4	●	Up to £2,000,000
William Hare Ltd	0161 609 0000	●	●	●	●	●	●	●	●	●	●	●		●		✔	4	●	Above £6,000,000
Company name	Tel	C	D	E	F	G	H	J	K	L	M	N	Q	R	S	QM	FPC	SCM	Guide Contract Value (1)

Corporate Members

Corporate Members are clients, professional offices, educational establishments etc which support the development of national specifications, quality, fabrication and erection techniques, overall industry efficiency and good practice.

Company name	Tel
Balfour Beatty Utility Solutions Ltd	01332 661491
Bluefing Group	020 3040 6723
Griffiths & Armour	0151 236 5656
Highways Agency	08457 504030
Kier Construction Ltd	01767 640111

Company name	Tel
PTS (TQM) Ltd	01785 250706
Roger Pope Associates	01752 263636
Sandberg LLP	020 7565 7000
SUM Ltd	0113 242 7390
Welding Quality Management Services Ltd	00 353 87 295 5335

Associate Members

Associate Members are those principal companies involved in the direct supply to all or some Members of components, materials or products. Associate member companies must have a registered office within the United Kingdom or Republic of Ireland.

1 Structural components
2 Computer software
3 Design services
4 Steel producers
5 Manufacturing equipment
6 Protective systems
7 Safety systems
8 Steel stockholders
9 Structural fasteners

CE CE Marking compliant, where relevant:
M manufacturer (products CE Marked)
D/I distributor/importer (systems comply with the CPR)
N/A CPR not applicable

SCM Steel Construction Sustainability Charter
● = Gold, ● = Silver, ● = Member

Company name	Tel	1	2	3	4	5	6	7	8	9	CE	SCM
AceCad Software Ltd	01332 545800		●								N/A	
Albion Sections Ltd	0121 553 1877	●									M	
Andrews Fasteners Ltd	0113 246 9992									●	M	
Arcelor Mittal Distribution - Scunthorpe	01724 810810								●		D/I	
ASD metal services	0113 254 0711								●		D/I	
Ayrshire Metal Products (Daventry) Ltd	01327 300990	●									M	
BAPP Group Ltd	01226 383824									●	M	
Barrett Steel Services Limited	01274 682281								●		D/I	

Company name	Tel	1	2	3	4	5	6	7	8	9	CE	SCM
Behringer Ltd	01296 668259					●						
BW Industries Ltd	01262 400088	●									M	
Cellbeam Ltd	01937 840600	●									M	
Cellshield Ltd	01937 840600							●			N/A	
Cleveland Steel & Tubes Ltd	01845 577789								●		M	
CMC (UK) Ltd	029 2089 5260								●		D/I	
Composite Profiles UK Ltd	01202 659237	●									D/I	
Cooper & Turner Ltd	0114 256 0057									●	M	

RQSC
The Register of Qualified Steelwork Contractors Scheme

Steelwork contractors for bridgeworks

The Register of Qualified Steelwork Contractors Scheme for Bridgeworks (RQSC) is open to any Steelwork Contractor who has a fabrication facility within the European Union.

Applicants may be registered in one or more category to undertake the fabrication and the responsibility for any design and erection of:

FG Footbridge and sign gantries
PG Bridges made principally from plate girders
TW Bridges made principally from trusswork
BA Bridges with stiffened complex platework (eg in decks, box girders or arch boxes)
CM Cable-supported bridges (eg cable-stayed or suspension) and other major structures (eg 100 metre span)
MB Moving bridges
RF Bridge refurbishment
AS Ancilliary structures in steel associated with bridges, footbridges or sign gantries (eg grillages, purpose-made temporary works)
QM Quality management certification to ISO 9001
FPC Factory Production Control certification to BS EN 1090-1
1 – Execution Class 1 2 – Execution Class 2
3 – Execution Class 3 4 – Execution Class 4
SCM Steel Construction Sustainability Charter (● = Gold, ● = Silver, ● = Member)

Notes
(1) Contracts which are primarily steelwork but which may include associated works. The steelwork contract value for which a company is pre-qualified under the Scheme is intended to give guidance on the size of steelwork contract that can be undertaken; where a project lasts longer than a year, the value is the proportion of the steelwork contract to be undertaken within a 12 month period.
Where an asterisk (*) appears against any company's classification number, this indicates that the assets required for this classification level are those of the parent company.

BCSA steelwork contractor member	Tel	FG	PG	TW	BA	CM	MB	RF	AS	QM	FPC	NHSS 19A	NHSS 20	SCM	Guide Contract Value (1)
Briton Fabricators Ltd	0115 963 2901	●	●	●	●	●	●	●	●	✓	4		✓		Up to £3,000,000
Cairnhill Structures Ltd	01236 449393	●	●	●	●			●	●	✓	4			●	Up to £3,000,000
Cleveland Bridge UK Ltd	01325 381188	●	●	●	●	●	●	●	●	✓	4	✓	✓	●	Above £6,000,000*
Four-Tees Engineers Ltd	01489 885899	●	●	●	●		●	●	●	✓	3		✓	●	Up to £2,000,000
Kiernan Structural Steel Ltd	00 353 43 334 1445		●		●			●	●	✓	4			●	Up to £3,000,000
Mabey Bridge Ltd	01291 623801	●	●	●	●	●	●	●	●	✓	4	✓	✓	●	Above £6,000,000
Millar Callaghan Engineering Services Ltd	01294 217711	●						●	●	✓	4				Up to £800,000
Murphy International Ltd	00 353 45 431384	●	●	●					●	✓	4				Up to £1,400,000
Nusteel Structures Ltd	01303 268112	●	●	●	●	●	●	●	●	✓	4	✓	✓		Up to £4,000,000
Painter Brothers Ltd	01432 374400	●		●					●	✓	2			●	Up to £6,000,000
S H Structures Ltd	01977 681931	●		●	●	●	●		●	✓	4		✓	●	Up to £3,000,000
Severfield (UK) Ltd	01204 699999	●	●	●	●	●	●	●	●	✓	4		✓	●	Above £6,000,000
Non-BCSA member															
Allerton Steel Ltd	01609 774471	●	●	●	●				●	✓	4		✓		Up to £2,000,000
Cimolai SpA	01223 350876	●	●	●	●	●	●	●	●	✓	4				Above £6,000,000
Concrete & Timber Services Ltd	01484 606416	●	●	●	●	●	●		●	✓	4			●	Up to £800,000
Donyal Engineering Ltd	01207 270909	●						●	●	✓	3		✓	●	Up to £1,400,000
Francis & Lewis International Ltd	01452 722200							●	●	✓	2		✓	●	Up to £2,000,000
Harland & Wolff Heavy Industries Ltd	028 9045 8456	●	●	●	●	●		●	●	✓	3				Up to £2,000,000
Hollandia BV	00 31 180 540540	●	●	●	●	●	●	●	●	✓	3				Above £6,000,000
IHC Engineering (UK) Ltd	01773 861734	●							●	✓	3		✓		Up to £400,000
Interserve Construction Ltd	0121 344 4888							●	●	✓	N/A				Above £6,000,000*
Interserve Construction Ltd	020 8311 5500	●	●	●	●		●	●	●	✓	N/A				Above £6,000,000*
Lanarkshire Welding Company Ltd	01698 264271	●	●	●	●	●	●	●	●	✓	4	✓		●	Up to £2,000,000
P C Richardson & Co (Middlesbrough) Ltd	01642 714791	●						●	●	✓	N/A				Up to £3,000,000

Company name	Tel	1	2	3	4	5	6	7	8	9	CE	SCM
CSC (UK) Ltd	0113 239 3000		●								N/A	
Cutmaster Machines (UK) Ltd	01226 707865					●					N/A	
Daver Steels Ltd	0114 261 1999	●									M	
Duggan Profiles & Steel Service Centre Ltd	00 353 56 7722485	●							●		M	
easi-edge Ltd	01777 870901							●			N/A	●
Fabsec Ltd	0845 094 2530	●									N/A	
FabTrol Systems UK Ltd	01274 590865		●								N/A	
Ficep (UK) Ltd	01942 223530					●					N/A	
FLI Structures	01452 722200	●									M	●
Forward Protective Coatings Ltd	01623 748323						●				N/A	
Goodwin Steel Castings Ltd	01782 220000	●									N/A	
Graitec UK Ltd	0844 543 8888		●								N/A	
Hadley Group Ltd	0121 555 1342	●									M	○
Hempel UK Ltd	01633 874024						●				N/A	
Highland Metals Ltd	01343 548855						●				N/A	
Hilti (GB) Ltd	0800 886100									●	M	
Hi-Span Ltd	01953 603081	●									M	●
International Paint Ltd	0191 469 6111						●				N/A	●
Jack Tighe Ltd	01302 880360						●				N/A	
Jamestown Cladding & Profiling Ltd	00 353 45 434288	●									M	
John Parker & Sons Ltd	01227 783200								●	●	D/I	
Jotun Paints (Europe) Ltd	01724 400000						●				N/A	
Kaltenbach Ltd	01234 213201					●					N/A	

Company name	Tel	1	2	3	4	5	6	7	8	9	CE	SCM
Kingspan Structural Products	01944 712000	●									M	●
Lindapter International	01274 521444									●	M	
Metsec Plc	0121 601 6000	●									M	●
MSW Structural Floor Systems	0115 946 2316	●									D/I	
Murray Plate Group Ltd	0161 866 0266								●		D/I	
National Tube Stockholders Ltd	01845 577440								●		D/I	
Peddinghaus Corporation UK Ltd	01952 200377					●					N/A	
PPG Performance Coatings UK Ltd	01773 814520						●				N/A	
Prodeck-Fixing Ltd	01278 780586	●									D/I	
Rainham Steel Co Ltd	01708 522311								●		D/I	
Sherwin-Williams Protective & Marine Coatings	01204 521771						●				M	○
Sika Ltd	01707 384444						●				M	
Structural Metal Decks Ltd	01202 718898	●									M	●
Tata Steel	01724 404040				●						M	
Tata Steel Distribution UK & Ireland	01902 484000								●		D/I	
Tata Steel Ireland Service Centre	028 9266 0747								●		D/I	
Tata Steel Service Centre Dublin	00 353 1 405 0300								●		D/I	
Tata Steel Tubes	01536 402121				●						M	
Tata Steel UK Panels & Profiles	0845 3088330	●									M	
Tekla (UK) Ltd	0113 307 1200		●								N/A	
Tension Control Bolts Ltd	01948 667700						●			●	M	
Wedge Group Galvanizing Ltd	01909 486384						●				N/A	

New and revised codes & standards

From BSI Update September 2014

BS EN PUBLICATIONS

BS EN ISO 4017:2014
Fasteners. Hexagon head screws. Product grades A and B
Supersedes BS EN ISO 4017:2011

UPDATED BRITISH STANDARDS

BS EN 1991-1-7:2006+A1:2014
Eurocode 1. Actions on structures. General actions. Accidental actions
AMENDMENT 1

BS EN 1997-1:2004+A1:2013
Eurocode 7. Geotechnical design. General rules
AMENDMENT 1

NA+A1:2014 to BS EN 1991-1-7:2006+A1:2014
National Annex to Eurocode 1. Actions on structures. General actions. Accidental actions
AMENDMENT 1

NA+A1:2014 to BS EN 1997-1:2004+A1:2013
National Annex to Eurocode 7. Geotechnical design. General rules
AMENDMENT 1

BRITISH STANDARDS UNDER REVIEW

BS EN 10278:1999
Dimensions and tolerances of bright steel products

NEW WORK STARTED

EN 1536:2010/A1
Execution of special geotechnical works. Bored piles

EN 1538:2010/A1
Execution of special geotechnical works. Diaphragm walls

ISO 10675-1
Non-destructive testing of welds. Acceptance levels for radiographic testing. Steel, nickel, titanium and their alloys
Will supersede BS EN ISO 10675-1:2013

Click on the page to **zoom**

Navigate around the page with the mouse - no need to drag

Click again to return to **full page view**