Bolted connections to hollow sections and column webs

David Brown of the SCI reviews design models – including simple analysis, resistance formulae and FE-based software.

Connections to planar elements

Designers occasionally wish to develop a bolted connection to the wall of a hollow section, or to the web of a member – generally a column, as shown in Figure 1. Whilst fin plates, extended plates and plates across the toes of the supporting member can be used (Figure 2) particularly when the loading is shear only, situations do arise when end plate type connections are required. If the member is subject to an applied moment, or to an axial tension, the bolts are in tension and the planar element of the connected member (the hollow section wall or member web) is subject to tension applied by the bolts. The out of plane resistance of those planar elements is the subject of this technical article.

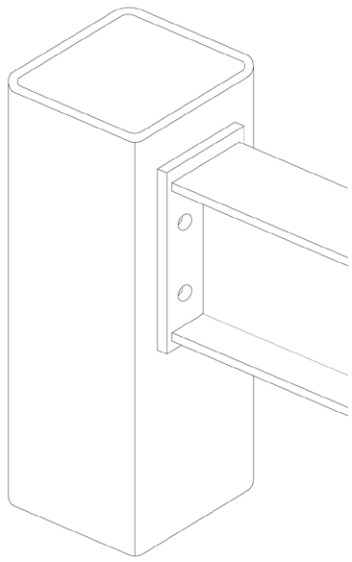

Figure 1: Bolted connection to hollow section

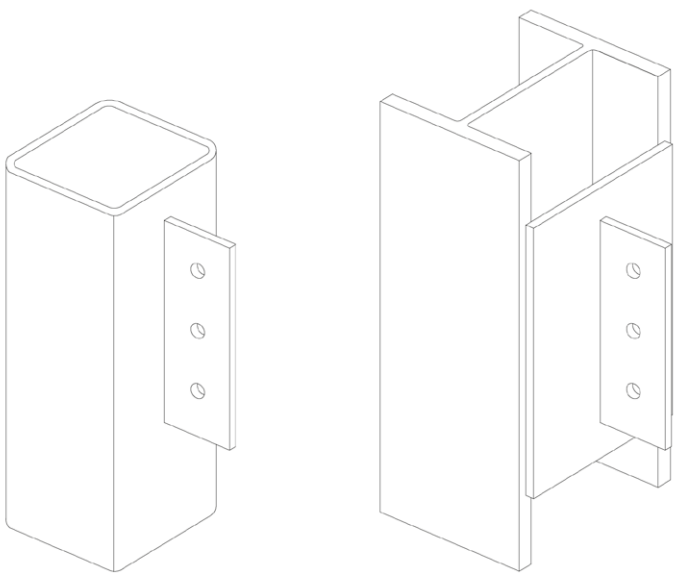

Figure 2: Alternative bolted connections

"Blind" connectors

For connections to hollow sections and other situations with one-sided access, various proprietary fixings are available[1]. Among these fixings are bolts with a slotted sleeve which is designed to flare out and provide the anchor on the side with no access. The deformation of the sleeve may be by an internal mandrel driven through the bolt, or by a threaded cone which rides along the bolt shank as the bolt is tightened. Other fixings include bolts with a pivoted anchor initially lying within a slot in the bolt shank. After inserting and rotating the bolt the anchor pivots into position.

Some details adopt ordinary bolts, with an access hole in the side wall of the member, though this is not common in the author's experience. Some designers propose forming threaded holes, by drilling and tapping the member. The UK has generally advised against drilling and tapping holes as the result is very different from the use of a high strength nut. Nuts have an ultimate strength of 800 N/mm² or 1000 N/mm² (Property Class 8.8 and 10.9 respectively) so the performance of a bolt threaded in material with an ultimate strength of perhaps 500 N/mm² will be rather different. In contrast to the UK view, the proposed revisions to EN 1993-1-8 include a table giving the minimum length of thread engagement in a threaded hole in S235, S355, S460 and stronger material. A note to the table allows the minimum thread engagement length to be set by the National Annex, so this will be the opportunity for the UK to prohibit this approach if required.

Critical design checks

In the typical details illustrated in Figure 1, the critical check is not the resistance of the fixing, which may be selected to accommodate the design forces. The critical check is very likely to be the resistance of the supporting member to the out-of-plane forces, particularly with the relatively thin walls of hollow sections and some webs, depending on the section. The ultimate resistance will obviously be important, but the deformation at working loads should also be considered as any rotation of the joint will contribute to the overall deformation of the supported element – for example if a parapet handrail had a base connection of this form.

Design models

Many designers will know of the CIDECT Design Guides, covering all aspects of construction with hollow sections. Design Guide 9[2] provides an expression for the resistance of a hollow section face in equation 6.27 of the guide. The resistance expression covers a group of four bolts in tension, as would commonly be found around the tension flange of a beam. The resistance expression is reproduced below, but with the nomenclature changed to Eurocode terms:

$$F_{Rd} = f(n)\frac{f_y t^2}{(1-c/b')}\left[2\frac{p-d}{b'} + 4(1-c/b')^{0.5}\right]$$

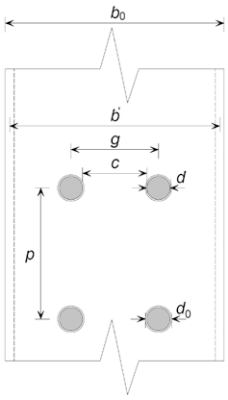

Where:

- p is the vertical pitch of the bolt group
- g is the horizontal gauge of the bolt group
- d is the bolt diameter
- b' = $b_o - t$
- c = $g - d$
- t is the thickness of the hollow section wall
- $f(n)$ = $1 + n \leq 1.0$
- n = column stress / yield stress

Designers should note that in the CIDECT design guide, compression is negative. This is the reverse of the sign convention in BS EN 1993-1-8.

Gomes *et al*[3] developed a formula for resistance which allowed for the relative width of the bolt group within the hollow sections wall (i.e. is the bolt group relatively narrow or wide with respect to the width of the wall?).

The formula developed by Gomes *et al* is given over the page: ▸26

▸24

$$F_{Rd} = k\,\frac{\pi f_y t^2}{1-\frac{b'}{b_0}}\left[\left(1-\frac{b'}{b_0}\right)^{0.5}+\frac{2c}{\pi b_0}\right]$$

Where:

If $\frac{b'+c'}{b_0} > 1$ then $k = 1.0$

Otherwise $k = 0.7 + \frac{0.6(b'+c')}{b_0}$

In the above expressions the quite different definitions of b' and c' should be noted:

$b' = g + 0.9d_{ba}$ and $c' = p + 0.9d_{ba}$ where d_{ba} is the effective diameter of the bolt clamping area (the average of the dimensions across the flats and across the points of the bolt head).

Finally, a formula is given in P358[4] used for the tying resistance of a bolted connection to a hollow section wall. The expression is reproduced below but adopting the yield strength rather than the ultimate strength and using nomenclature previously defined.

$$F_{Rd} = \frac{8M_{pl}}{(1-\beta_1)}\left[\eta_1 + 1.5(1-\beta_1)^{0.5}(1-\gamma_1)^{0.5}\right]$$

Where:

$$M_{pl} = \frac{f_y t^2}{4}$$

$$\eta_1 = \frac{(n_1-1)p-\frac{n_1}{2}d_0}{b_0-3t}$$, which is equivalent to $\frac{p-d_0}{(b_0-3t)}$ for a group of four bolts

$$\beta_1 = \frac{g}{(b_0-3t)}$$

$$\gamma_1 = \frac{d_0}{(b_0-3t)}$$

d_0 is the diameter of the hole

n_1 is the number of rows of bolts

The general similarities between the expressions can be seen. The multiplier of 1.5 in the P358 expression is included to allow for axial compression in the column, but there is no indication of the stress ratio assumed. It should be noted that if the multiplier were larger, the resistance increases, so the value should decrease with increasing compression.

Comparison of results

Results are presented in Table 1 for the three design approaches, for two arrangements in a S355 SHS. Wang *et al*[5] undertook physical tests and completed the same calculations – their values are shown for comparison. Whilst generally good agreement is seen for the CIDECT and SCI calculated resistances, there is clearly a significant difference when calculating the resistance according to Gomes for the 90 mm gauge. The test resistance indicated as "yield" is based on a limiting deformation of the chord face, equal to 3% of the SHS face, or 4.5 mm for the 150 SHS tested. This limiting deformation is recommended by CIDECT[2] and reflected in the resistance formulae given in the design guides.

	b_0 = 150 mm; t = 8 mm; d = 16 mm; g = 60 mm; p = 100 mm			b_0 = 150 mm; t = 8 mm; d = 16 mm; g = 90 mm; p = 100 mm		
	Resistance (kN) according to design model					
Resistance calculations	Gomes	CIDECT	P358	Gomes	CIDECT	P358
SCI	189	148	144	291	187	222
Wang et al	201	149	139	444	189	215
Test result ("yield")	174			242		

Table 1: Calculated resistances for bolted connections to SHS face

There are many uncertainties in Table 1. Only one test was completed for each arrangement, so no statistical analysis is possible. It is not clear if the presented results allow for the measured material properties. The results for CIDECT assume no compression in the column (which is unreasonable; introducing compression reduces the resistance considerably) whilst the P358 calculation has an allowance for some (unspecified) compression. The P358 expression is for tying resistance, when irreversible permanent deformation is anticipated.

The paper by Wang *et al* describes three modes of failure when testing the expanding anchor type fixing. In the first mode, which happened in every test when the SHS wall was 5 mm, the fixings deformed and pulled through the SHS. In mode 2, failure was by a combination of deformation of the SHS wall and tensile failure of the fixings. Mode 3 was characterised by failure of the fixings. Pull-through is a very variable mode of failure and should be avoided. Assessment and evaluation standards for blind fasteners, such as EAD 330001[6] insist that the failure mode cannot be pull-through. Reference 1 reports this behaviour in wall thicknesses below 8 mm.

FE models

Modelling the connection in a widely-used FE-based software yielded a maximum tension of around 200 kN for the bolts at 60 mm gauge, applying the 3% deformation limit to the SHS. This contrasts with the CIDECT value

of 148 kN and P358 value of 144 kN. A check of the second connection with bolts at 90 mm gauge could not be completed – the software reported that the bolts would clash with the internal radius of the SHS.

With an axial compression of 300 kN the maximum tension reduced slightly. With an axial compression of 600 kN, the maximum tension reduced to around 185 kN. At this level of compressive stress, the CIDECT resistance drops from 148 kN to 92 kN.

Including deformation in compression

When bolting to an SHS wall, or to a column web, whilst the tension zone deforms in one direction, the compression zone will deform in the opposite direction, contributing to the overall rotation of the joint. Reference 3 offers advice on the calculation of the resistance in this situation.

Simple alternatives

In real life, plenty of connections will have to be made where the bolts cannot be located symmetrically to the supporting member. In these cases, a much simpler model may be appropriate, analysing a "beam" spanning between "supports", with point loads at the positions of the fixings. A traditional assumption is that the width of the "beam" is defined by considering a 45° spread back to the support (but not double counting with an adjacent "beam"). Some assumptions need to be made about fixity at the "supports". The development of a simple design model is shown in Figure 3 (adapted from Figure 4.9 in reference 2).

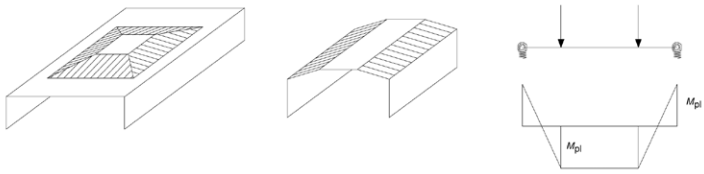

Figure 3: Development of design model

If the bolts are symmetrically placed at 60 mm gauge, as shown in Figure 4 the distance to the side walls is 45 mm. If dispersion in each direction is 45°, then the width of the "beam" is 90 mm (which does not double count the adjacent "beam"). With four plastic hinges, each 90 mm long, the resistance of the 8 mm wall is given by:

$$\frac{4\left[\frac{355\times90\times8^2}{4}\right]}{45}\times10^{-3} = 45\text{ kN}$$

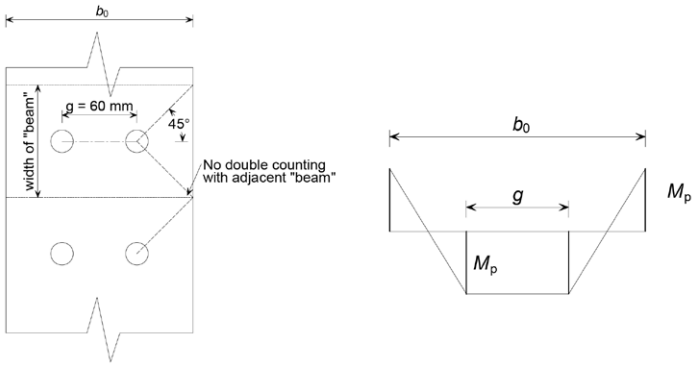

Determination of "beam" dimensions

Design model

Figure 4: Simple design model

The resistance is significantly less than the CIDECT formula, and much lower than FE, but simple and conservative.

Conclusions

For connections to thin elements such as hollow section walls or column webs, the fixing is generally not the critical component – it can be sized to suit. Several design models are available, with significant variations in the results. Simple models represent one end of the range, and FE the other. Whilst ultimate resistance is critical, designers should not forget the deformation of the components at serviceability loads which contribute to overall joint rotation. Finally, fixings should be specified to ensure that pull-through is not the failure mode, which may govern in thin material[1]. ■

1 Tizani, W. Nethercot, D.A.; **The practice of blind bolting connections to structural hollow sections: A review**; *Steel and composite structures*, March 2001

2 Kurobane, Y; Packer, J.A; Wardenier, J; Yeomans, N.; **Design Guide for structural hollow section column connections**; *CIDECT Design Guide 9*, CIDECT, 2004

3 Gomes, F. C. T; Jaspart, J. P; Maquoi, R.; **Moment capacity of beam-to-column minor axis joints;** *Proceedings of IABSE International Colloquium on semi-rigid structural connections, Turkey 1996*, IABSE, 1996

4 **Joints in steel construction: Simple joints to Eurocode 3 (P358)** ;SCI & BCSA, 2014

5 Wang, Z-Y; Wang, Q-Y.; **Yield and ultimate strength determination of a blind bolted end plate connection to square hollow section column**; Elsevier, 2015

6 EAD 330001-00-0602; **Expanding structural bolting assemblies for blind fasteners**, EOTA 2017